Digital Indicating Conductivity Meter

AER-102-ECH

(HIGH CONCENTRATION)

Instruction Manual

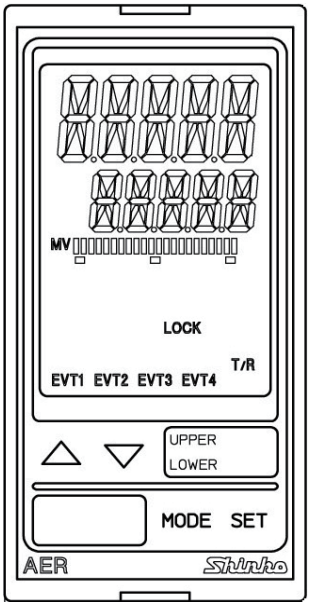

Shinko

Preface

Thank you for purchasing our AER-102-ECH, Digital Indicating Conductivity Meter.

This manual contains instructions for the mounting, functions, operations and notes when operating the AER-102-ECH. To ensure safe and correct use, thoroughly read and understand this manual before using this instrument.

To prevent accidents arising from the misuse of this instrument, please ensure the operator receives this manual.

Characters Used in This Manual

Indication													
Number, ℃/℉	-1	0	1	2	3	4	5	6	7	8	9	℃	℉
Indication													
Alphabet	A	B	C	D	E	F	G	H	I	J	K	L	M
Indication													
Alphabet	N	O	P	Q	R	S	T	U	V	W	X	Y	Z

⚠ Caution

- This instrument should be used in accordance with the specifications described in the manual. If it is not used according to the specifications, it may malfunction or cause a fire.
- Be sure to follow all of the warnings, cautions and notices. If they are not observed, serious injury or malfunction may occur.
- The contents of this instruction manual are subject to change without notice.
- Care has been taken to ensure that the contents of this instruction manual are correct, but if there are any doubts, mistakes or questions, please inform our sales department.
- This instrument is designed to be installed through a control panel. If it is not, measures must be taken to ensure that the operator cannot touch power terminals or other high voltage sections.
- Any unauthorized transfer or copying of this document, in part or in whole, is prohibited.
- Shinko Technos Co., Ltd. is not liable for any damage or secondary damage(s) incurred as a result of using this product, including any indirect damage.

Safety Precautions (Be sure to read these precautions before using our products.)

The safety precautions are classified into 2 categories: “Warning” and “Caution”.
Depending on the circumstances, procedures indicated by ⚠ Caution may result in serious consequences, so be sure to follow the directions for usage.

⚠ Warning Procedures which may lead to dangerous conditions and cause death or serious injury, if not carried out properly.

⚠ Caution Procedures which may lead to dangerous conditions and cause superficial to medium injury or physical damage or may degrade or damage the product, if not carried out properly.

⚠ Warning

- To prevent an electric shock or fire, only Shinko or other qualified service personnel may handle the inner assembly.
- To prevent an electric shock, fire or damage to the instrument, parts replacement may only be undertaken by Shinko or other qualified service personnel.

⚠ SAFETY PRECAUTIONS

- To ensure safe and correct use, thoroughly read and understand this manual before using this instrument.
- This instrument is intended to be used for measuring equipment. Verify correct usage after purpose-of-use consultation with our agency or main office. (Never use this instrument for medical purposes with which human lives are involved.)
- Proper periodic maintenance is also required.
- This instrument must be used under the conditions and environment described in this manual. Shinko Technos Co., Ltd. does not accept liability for any injury, loss of life or damage occurring due to the instrument being used under conditions not otherwise stated in this manual.

⚠ Caution with Respect to Export Trade Control Ordinance

To avoid this instrument from being used as a component in, or as being utilized in the manufacture of weapons of mass destruction (i.e. military applications, military equipment, etc.), please investigate the end users and the final use of this instrument. In the case of resale, ensure that this instrument is not illegally exported.

1. Installation Precautions

⚠ Caution

This instrument is intended to be used under the following environmental conditions (IEC61010-1): Overvoltage category Ⅱ, Pollution degree 2

Ensure the mounting location corresponds to the following conditions:

- A minimum of dust, and an absence of corrosive gases
- No flammable, explosive gases
- No mechanical vibrations or shocks
- No exposure to direct sunlight, an ambient temperature of 0 to 50℃ (32 to 122℉) that does not change rapidly, and no icing
- An ambient non-condensing humidity of 35 to 85 %RH
- No large capacity electromagnetic switches or cables through which large current is flowing.
- No water, oil, chemicals or the vapors of these substances can come into direct contact with the unit.
- If the AER-102-ECH is mounted through the face of a control panel, the ambient temperature of the unit – not the ambient temperature of the control panel – must be kept under 50℃. Otherwise the life of electronic parts (especially electrolytic capacitors) of the unit will be shortened.

Note: Do not install this instrument on or near flammable material even though the case of this instrument is made of flame-resistant resin.

2. Wiring Precautions

⚠ Caution

- Do not leave wire remnants in the instrument, as they could cause a fire or a malfunction.
- Use a solderless terminal with an insulation sleeve in which the M3 screw fits when wiring the AER-102-ECH.
- The terminal block of this instrument is designed to be wired from the left side. The lead wire must be inserted from the left side of the terminal, and fastened with the terminal screw.
- Tighten the terminal screw using the specified torque. If excessive force is applied to the screw when tightening, the terminal screw or the case may be damaged.
- This instrument does not have a built-in power switch, circuit breaker and fuse. It is necessary to install a power switch, circuit breaker and fuse near the instrument. (Recommended fuse: Time-lag fuse, rated voltage 250 V AC, rated current 2 A)
- For a 24 V AC/DC power source, do not confuse polarity when using direct current (DC).
- Be sure to connect the ground terminal to earth for safety (D-class grounding). Keep the grounding of this unit separate from other electrical devices, such as motors.
- Do not apply a commercial power source to the sensor which is connected to the input terminal nor allow the power source to come into contact with the sensor.
- Use the 4-electrode Conductivity Sensor in accordance with the sensor input specifications of the AER-102-ECH.
- Keep the input wires and power lines separate.

Note about 4-Electrode Conductivity Sensor Cable

The 4-electrode Conductivity Sensor cable is a highly-insulated (electrical) cable. Please handle it with utmost care as follows.

- Do not allow terminals and socket of the 4-electrode Conductivity Sensor cable to come in contact with moisture or oil of any kind. Likewise, ensure fingers are clean, otherwise the insulation will deteriorate, resulting in unstable indication.
  Be sure to keep the cable dry and clean at all times.
  If the cable is stained, clean it with alcohol, and dry it completely.
- For calibration or electrode checking/replacement, the 4-electrode Conductivity Sensor cable should be wired with sufficient length.
- Keep the 4-electrode Conductivity Sensor cable and junction cable away from electrical devices, such as motors or their power lines from which inductive interference emanates.

Connection

The 4-electrode Conductivity Sensor cable has the following terminals.

Code	Terminal
1	Conductivity sensor terminal
2	Conductivity sensor terminal
3	Conductivity sensor terminal
4	Conductivity sensor terminal
A, B	Temperature compensation sensor terminals [Pt100 (2-wire), Pt1000]
A, B, B	Temperature compensation sensor terminals [Pt100 (3-wire)]
E	Shield wire terminal

For the electrode with No Temperature Compensation, A, B or A, B, B cables are not available.

E cables are available depending on the sensor type.

3. Operation and Maintenance Precautions

⚠ Caution

- Do not touch live terminals. This may cause an electric shock or problems in operation.
- Turn the power supply to the instrument OFF when retightening the terminal or cleaning.
  Working on or touching the terminal with the power switched ON may result in severe injury or death due to electric shock.
- Use a soft, dry cloth when cleaning the instrument.
  (Alcohol based substances may tarnish or deface the unit.)
- As the display section is vulnerable, be careful not to put pressure on, scratch or strike it with a hard object.

Contents

Page

1. Model 8
   1.1 Model 8
   1.2 How to Read the Model Label 8
2. Names and Functions of Instrument 9
3. Mounting to the Control Panel 10
   3.1 Site Selection 10
   3.2 External Dimensions (Scale: mm) 10
   3.3 Panel Cutout (Scale: mm) 11
   3.4 Mounting and Removal 12
4. Wiring 13
   4.1 Lead Wire Solderless Terminal 14
   4.2 Terminal Arrangement 15
5. Outline of Key Operation and Setting Groups 16
   5.1 Outline of Key Operation 16
   5.2 Setting Groups 16
6. Key Operation Flowchart 18
7. Setup 21
   7.1 Turn the Power Supply to the AER-102-ECH ON. 21
   7.2 Conductivity Input Group 22
   7.3 Temperature Input Group 25
   7.4 EVT1 Action Group 27
   7.5 EVT2 Action Group 35
   7.6 EVT3 Action Group 35
   7.7 EVT4 Action Group 35
   7.8 Basic Function Group 36
8. Calibration 42
   8.1 Conductivity Calibration Mode 42
   8.2 Temperature Calibration Mode 44
   8.3 Transmission Output 1 Adjustment Mode 45
   8.4 Transmission Output 2 Adjustment Mode 46
9. Measurement 47
   9.1 Starting Measurement 47
   9.2 EVT1 to EVT4 Outputs 48
   9.3 Error Output 50
   9.4 Fail Output 50
   9.5 Conductivity Input Error Alarm 51
   9.6 Cycle Automatic Variable Function 52
   9.7 Error Code during Measurement 53
   9.8 Setting EVT1 to EVT4 Values 53
   9.9 Transmission Output 1 and 2 55
10. Specifications 56
   10.1 Standard Specifications 56
   10.2 Optional Specifications 64

11. Troubleshooting 66
11.1 Indication 66
11.2 Key Operation 66
12. Temperature Compensation Method 67
12.1 Temperature Compensation Based on the Temperature Characteristics of NaCl 67
12.2 How to Input Temperature Coefficient 68
13. Character Tables 70
13.1 Setting Group List 70
13.2 Temperature Calibration Mode 70
13.3 Conductivity Calibration Mode 70
13.4 Transmission Output 1 Adjustment Mode 72
13.5 Transmission Output 2 Adjustment Mode 72
13.6 Simple Setting Mode 72
13.7 Conductivity Input Group 73
13.8 Temperature Input Group 75
13.9 EVT1 Action Group 76
13.10 EVT2 Action Group 78
13.11 EVT3 Action Group 80
13.12 EVT4 Action Group 82
13.13 Basic Function Group 84
13.14 Error Code List 87

1. Model

1.1 Model

AER-10	2-	EC	H		,□□□	
Input Points	2					2 points
Input		EC				4-electrode Conductivity Sensor (Temperature element Pt100) (*1)
						4-electrode Conductivity Sensor (Temperature element Pt1000) (*1)
Concentration			H			High concentration
Power supply voltage						100 to 240 V AC (standard)
				1		24 V AC/DC (*2)
Option					C5	Serial communication RS-485
					EVT3	EVT3, EVT4 outputs (Contact output 3, 4)
					TA2	Transmission output 2 (*3)

(*1) This input temperature specification was specified at the time of ordering.
(*2) Power supply voltage 100 to 240 V AC is standard.
When ordering 24 V AC/DC, enter “1” in Power supply voltage, after ‘ECH’.
(*3) If Transmission output 2 (TA2 option) is ordered, the EVT1 cannot be added.

1.2 How to Read the Model Label

The model label is attached to the left side of the case.

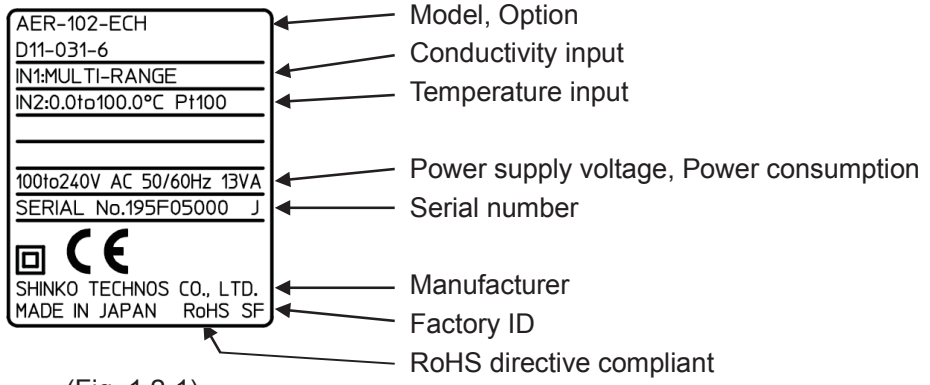

(Fig. 1.2-1)

2. Names and Functions of Instrument

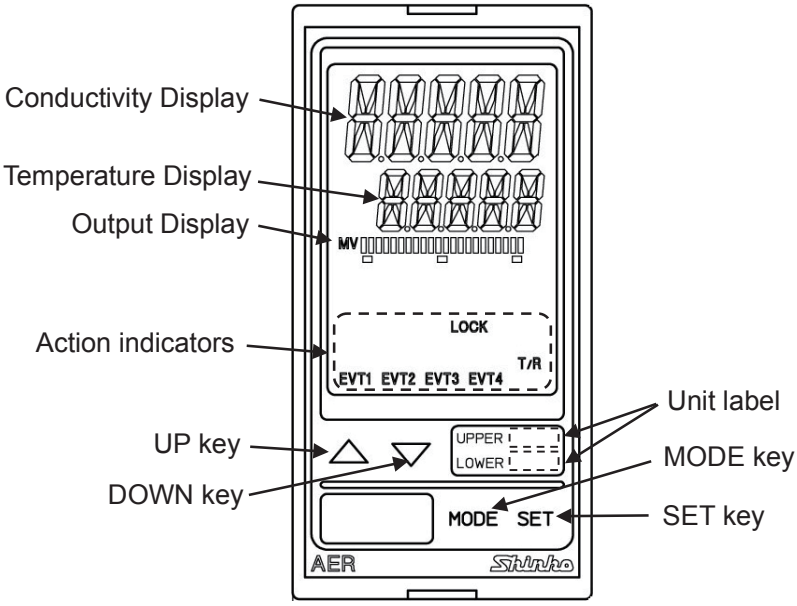

(Fig. 2-1)

Displays

Conductivity Display	Conductivity or characters in setting mode are indicated in red/green/orange. Indications differ depending on the selections in [Backlight selection (p.40)] and [Conductivity color (p.40)].
Temperature Display	Temperature or values in setting mode are indicated in green. Indications differ depending on the selections in [Backlight selection (p.40)].
Output Display	Backlight green The bar graph is lit corresponding to the transmission output. Indications differ depending on the selections in [Bar graph indication (p.41)].

Action Indicators (Backlight orange)

EVT1	Lights up when EVT1 output (Contact output 1) is ON.
EVT2	Lights up when EVT2 output (Contact output 2) is ON.
EVT3	Lights up when EVT3 output (Contact output 3) (EVT3 option) is ON.
EVT4	Lights up when EVT4 output (Contact output 4) (EVT3 option) is ON.
T/R	Lights up during Serial communication (C5 option) TX output (transmitting).
LOCK	Lights up when Lock 1, Lock 2 or Lock 3 is selected.

Unit label

UPPER	Attach the user's unit of Conductivity Display from the included unit labels if necessary.
LOWER	Attach the user's unit of Temperature Display from the included unit labels if necessary.

Keys

△	**UP key**	Increases the numeric value.
▽	**DOWN key**	Decreases the numeric value.
MODE	**MODE key**	Selects a group.
SET	**SET key**	Switches setting modes, and registers the set value.

3. Mounting to the Control Panel

3.1 Site Selection

⚠ Caution

Use within the following temperature and humidity ranges.
Temperature: 0 to 50℃ (32 to 122℉) (No icing)
Humidity: 35 to 85 %RH (Non-condensing)
If AER-102-ECH is mounted through the face of a control panel, the ambient temperature of the unit – not the ambient temperature of the control panel – must be kept under 50℃, otherwise the life of electronic parts (especially electrolytic capacitors) of the unit will be shortened.

This instrument is intended to be used under the following environmental conditions (IEC61010-1): Overvoltage category Ⅱ, Pollution degree 2

Ensure the mounting location corresponds to the following conditions:

- A minimum of dust, and an absence of corrosive gases
- No flammable, explosive gases
- No mechanical vibrations or shocks
- No exposure to direct sunlight, an ambient temperature of 0 to 50℃ (32 to 122℉) that does not change rapidly
- An ambient non-condensing humidity of 35 to 85 %RH
- No large capacity electromagnetic switches or cables through which large current is flowing
- No water, oil, chemicals or the vapors of these substances can come into direct contact with the unit

3.2 External Dimensions (Scale: mm)

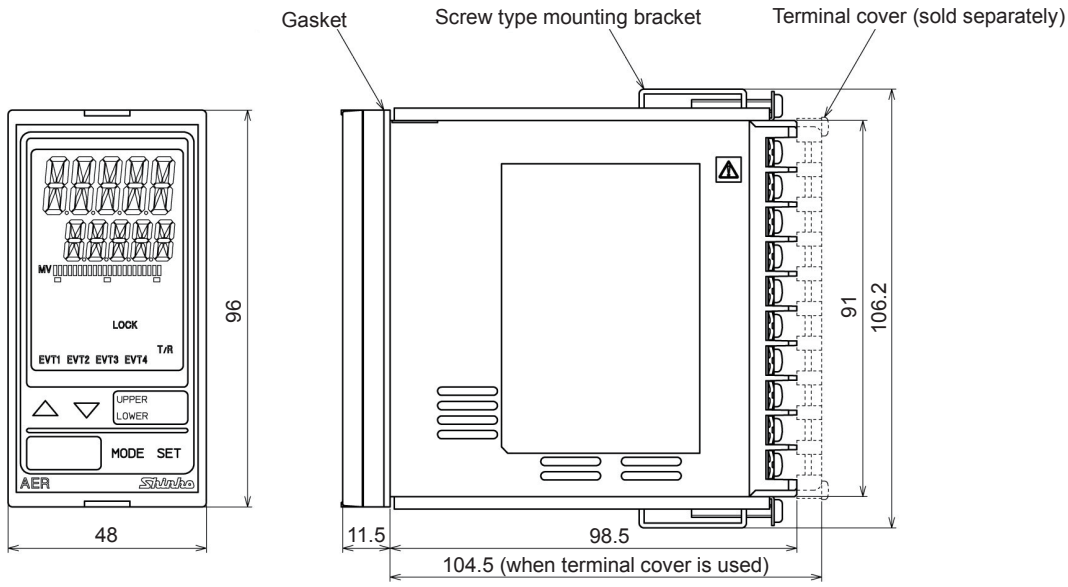

(Fig. 3.2-1)

3.3 Panel Cutout (Scale: mm)

⚠ Caution

If horizonal close mounting is used for the unit, IP66 specification (Drip-proof/ Dust-proof) may be compromised, and all warranties will be invalidated.

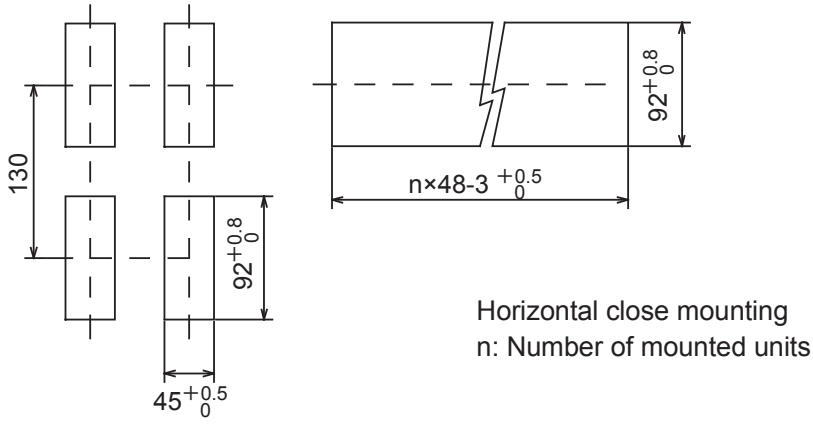

Horizontal close mounting
n: Number of mounted units

(Fig. 3.3-1)

3.4 Mounting and Removal

⚠ Caution

As the case is made of resin, do not use excessive force while screwing in the mounting bracket, or the case or mounting brackets could be damaged. The tightening torque should be 0.12 N•m.

How to mount the unit

Mount the unit vertically to the flat, rigid panel to ensure it adheres to the Drip-proof/Dust-proof specification (IP66).

Mountable panel thickness: 1 to 8 mm

(1) Insert the unit from the front side of the panel.

(2) Attach the mounting brackets by the holes at the top and bottom of the case, and secure the unit in place with the screws.

How to remove the unit

(1) Turn the power to the unit OFF, and disconnect all wires before removing the unit.

(2) Loosen the screws of the mounting brackets, and remove the mounting brackets.

(3) Pull the unit out from the front of the panel.

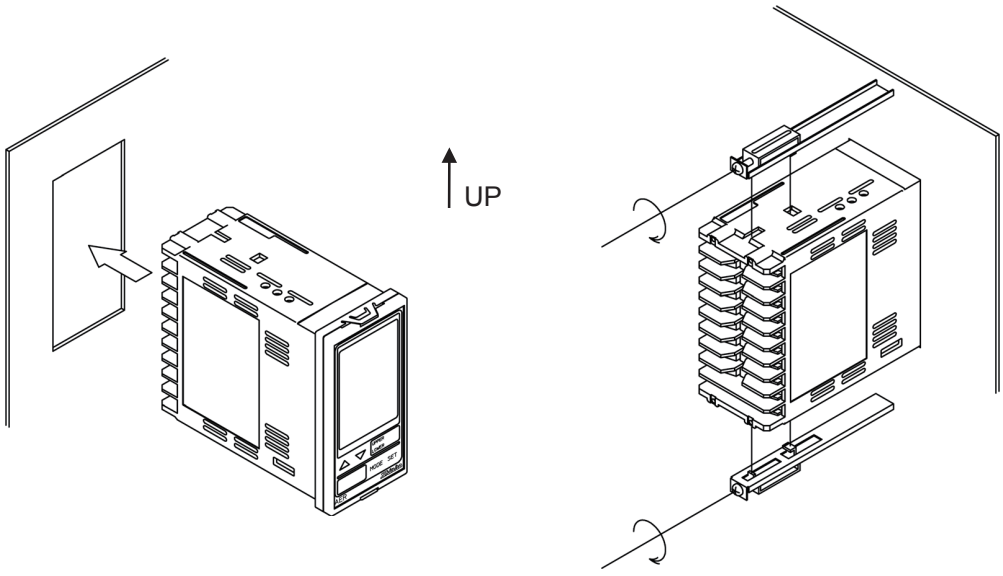

(Fig. 3.4-1)

4. Wiring

⚠ Warning

Turn the power supply to the instrument off before wiring or checking. Working on or touching the terminal with the power switched on may result in severe injury or death due to electrical shock.

⚠ Caution

- Do not leave wire remnants in the instrument, as they could cause a fire or a malfunction.
- Use a solderless terminal with an insulation sleeve in which the M3 screw fits when wiring the AER-102-ECH.
- The terminal block of this instrument is designed to be wired from the left side. The lead wire must be inserted from the left side of the terminal, and fastened with the terminal screw.
- Tighten the terminal screw using the specified torque. If excessive force is applied to the screw when tightening, the terminal screw may be damaged.
- This instrument does not have a built-in power switch, circuit breaker and fuse. It is necessary to install a power switch, circuit breaker and fuse near the instrument. (Recommended fuse: Time-lag fuse, rated voltage 250 V AC, rated current 2 A)
- For a 24 V AC/DC power source, do not confuse polarity when using direct current (DC).
- Be sure to connect the ground terminal to earth for safety (D-class grounding). Keep the grounding of this unit separate from other electrical devices, such as motors.
- Do not apply a commercial power source to the sensor which is connected to the input terminal nor allow the power source to come into contact with the sensor.
- Use the 4-electrode Conductivity Sensor in accordance with the sensor input specifications of this unit.
- Keep the input wires and power lines separate.

Note about the 4-Electrode Conductivity Sensor Cable

The 4-electrode Conductivity Sensor cable is a highly-insulated (electrical) cable. Please handle it with utmost care as follows.

- Do not allow terminals and socket of the 4-electrode Conductivity Sensor cable to come in contact with moisture or oil of any kind. Likewise, ensure fingers are clean, otherwise the insulation will deteriorate, resulting in unstable indication.
  Be sure to keep the cable dry and clean at all times.
  If the cable is stained, clean it with alcohol, and dry it completely.
- For calibration or electrode checking/replacement, the 4-electrode Conductivity Sensor cable should be wired with sufficient length.
- Keep the 4-electrode Conductivity Sensor cable and junction cable away from electrical devices, such as motors or their power lines from which inductive interference emanates.

Connection

The 4-electrode Conductivity Sensor cable has the following terminals.

Code	Terminal
1	Conductivity sensor terminal
2	Conductivity sensor terminal
3	Conductivity sensor terminal
4	Conductivity sensor terminal
A, B	Temperature compensation sensor terminals [Pt100 (2-wire), Pt1000]
A, B, B	Temperature compensation sensor terminals [Pt100 (3-wire)]
E	Shield wire terminal

For the electrode with No Temperature Compensation, A, B or A, B, B cables are not available.

E cables are available depending on the sensor type.

4.1 Lead Wire Solderless Terminal

Use a solderless terminal with an insulation sleeve in which an M3 screw fits as follows. The tightening torque should be 0.63 N•m.

Solderless Terminal	Manufacturer	Model	Tightening Torque
Y-type	Nichifu Terminal Industries CO.,LTD.	TMEV1.25Y-3	0.63 N•m
	Japan Solderless Terminal MFG CO.,LTD.	VD1.25-B3A	
Ring-type	Nichifu Terminal Industries CO.,LTD.	TMEV1.25-3	
	Japan Solderless Terminal MFG CO.,LTD.	V1.25-3	

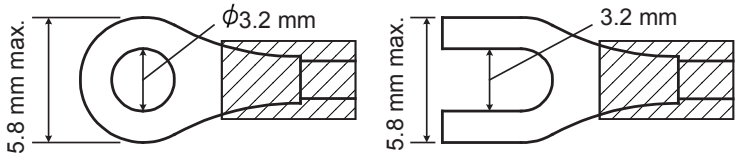

(Fig. 4.1-1)

4.2 Terminal Arrangement

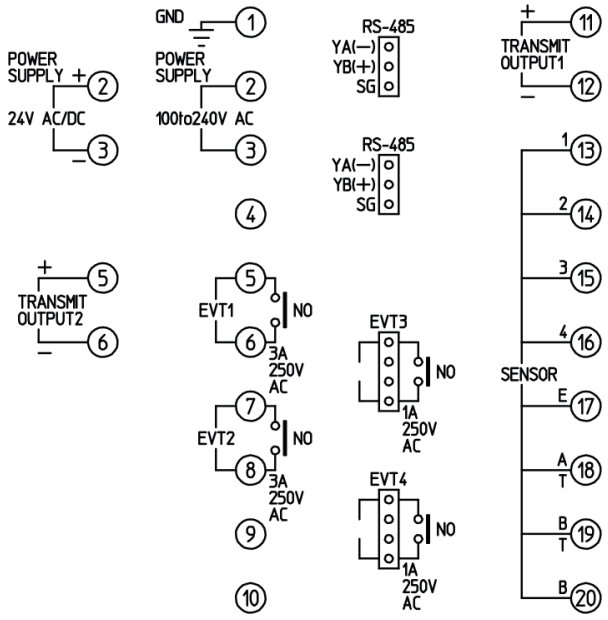

(Fig. 4.2-1)

GND	Ground
POWER SUPPLY	100 to 240 V AC or 24 V AC/DC (when 1 is added after 'ECH'. **For 24 V DC, ensure polarity is correct.**
EVT1	EVT1 output (Contact output 1)
EVT2	EVT2 output (Contact output 2)
TRANSMIT OUTPUT1	Transmission output 1
TRANSMIT OUTPUT2	Transmission output 2 (TA2 option)
1, 2, 3, 4	Conductivity sensor terminals 1, 2, 3, 4
E	Conductivity sensor shield wire terminal
A, B	Temperature compensation sensor terminals [Pt100 (2-wire), Pt1000]
A, B, B	Temperature compensation sensor terminals [Pt100 (3-wire)]
RS-485	Serial communication RS-485 (C5 option) 2 connectors are wired internally. Use the included wire harnesses C5J and C0J.
EVT3	EVT3 output (Contact output 3) (EVT3 option) Use the included wire harness HBJ.
EVT4	EVT4 output (Contact output 4) (EVT3 option) Use the included wire harness HBJ.

5. Outline of Key Operation and Setting Groups

5.1 Outline of Key Operation

There are 2 setting modes: Simple Setting Mode, and Group Selection Mode in which setting items are divided into groups.

To enter Simple Setting Mode, press the SET key in Conductivity/Temperature Display Mode.

To enter Group Selection Mode, press the MODE key in Conductivity/Temperature Display Mode.

Select a group with the MODE key, and press the SET key. The unit enters each setting item.

To set each item, use the △ or ▽ key, and register the set value with the SET key.

5.2 Setting Groups

Setting groups are described in the next page.

[About each mode and setting items]

(*1) In Conductivity/Temperature Display Mode, measurement starts, indicating the item selected in [Backlight selection (p.40)] in the Basic Function Group.

(*2) If oFF (No temperature compensation) is selected in [Temperature compensation method (p.25)] in the Temperature Input group, and if oFF (Unlit) or Srd (Reference temperature) is selected in [Temperature Display when no temperature compensation (p.41)] in the Basic Function group, the unit will not enter Temperature Calibration mode.

(*3) Available when the EVT3, EVT4 outputs (EVT3 option) are/is ordered.

(*4) Available when Transmission output 2 (TA2 option) is ordered.

(*5) Not available if Transmission output 2 (TA2 option) is ordered.

[Key Operation]

- △ + MODE (3 sec): Press and hold the △ key and MODE key (in that order) together for 3 seconds. The unit will proceed to Temperature Calibration mode.
- ▽ + MODE (3 sec): Press and hold the ▽ key and MODE key (in that order) together for 3 seconds. The unit will proceed to Conductivity Calibration Zero adjustment mode.
- △ + SET (3 sec): Press the △ and SET key (in that order) together for 3 seconds. The unit will proceed to Transmission output 1 Zero adjustment mode.
- ▽ + SET (3 sec): Press the ▽ and SET key (in that order) together for 3 seconds. The unit will proceed to Transmission output 2 Zero adjustment mode.
- MODE or SET: Press the MODE or SET key. The unit will proceed to the next setting item, illustrated by an arrow.
- SET or MODE: Press the SET or MODE key until the desired setting mode appears.
- To revert to Conductivity/Temperature Display Mode, press and hold the MODE key for 3 seconds while in any mode.

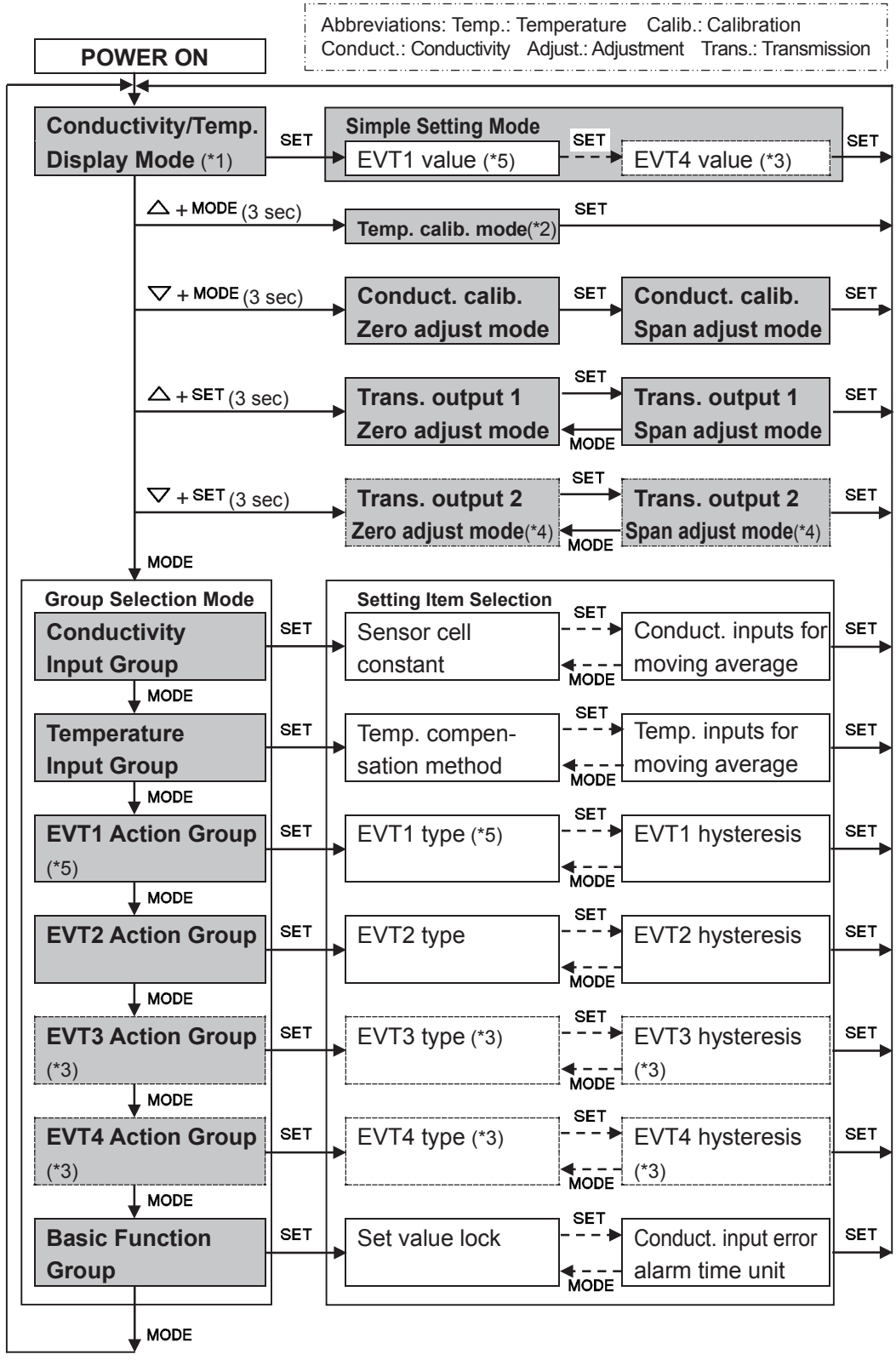
Abbreviations: Temp.: Temperature Calib.: Calibration
Conduct.: Conductivity Adjust.: Adjustment Trans.: Transmission
POWER ON
Conductivity/Temp. Display Mode (*1)
SET
Simple Setting Mode
EVT1 value (*5)
SET
EVT4 value (*3)
SET
△ + MODE (3 sec)
Temp. calib. mode(*2)
SET
▽ + MODE (3 sec)
Conduct. calib. Zero adjust mode
SET
Conduct. calib. Span adjust mode
SET
△ + SET (3 sec)
Trans. output 1 Zero adjust mode
SET
MODE
Trans. output 1 Span adjust mode
SET
▽ + SET (3 sec)
Trans. output 2 Zero adjust mode(*4)
SET
MODE
Trans. output 2 Span adjust mode(*4)
SET
MODE
Group Selection Mode
Setting Item Selection
Conductivity Input Group
SET
Sensor cell constant
SET
MODE
Conduct. inputs for moving average
SET
MODE
Temperature Input Group
SET
Temp. compen-sation method
SET
MODE
Temp. inputs for moving average
SET
MODE
EVT1 Action Group (*5)
SET
EVT1 type (*5)
SET
MODE
EVT1 hysteresis
SET
MODE
EVT2 Action Group
SET
EVT2 type
SET
MODE
EVT2 hysteresis
SET
MODE
EVT3 Action Group (*3)
SET
EVT3 type (*3)
SET
MODE
EVT3 hysteresis (*3)
SET
MODE
EVT4 Action Group (*3)
SET
EVT4 type (*3)
SET
MODE
EVT4 hysteresis (*3)
SET
MODE
Basic Function Group
SET
Set value lock
SET
MODE
Conduct. input error alarm time unit
SET
MODE

6. Key Operation Flowchart

Abbreviations:
Conduct.: Conductivity

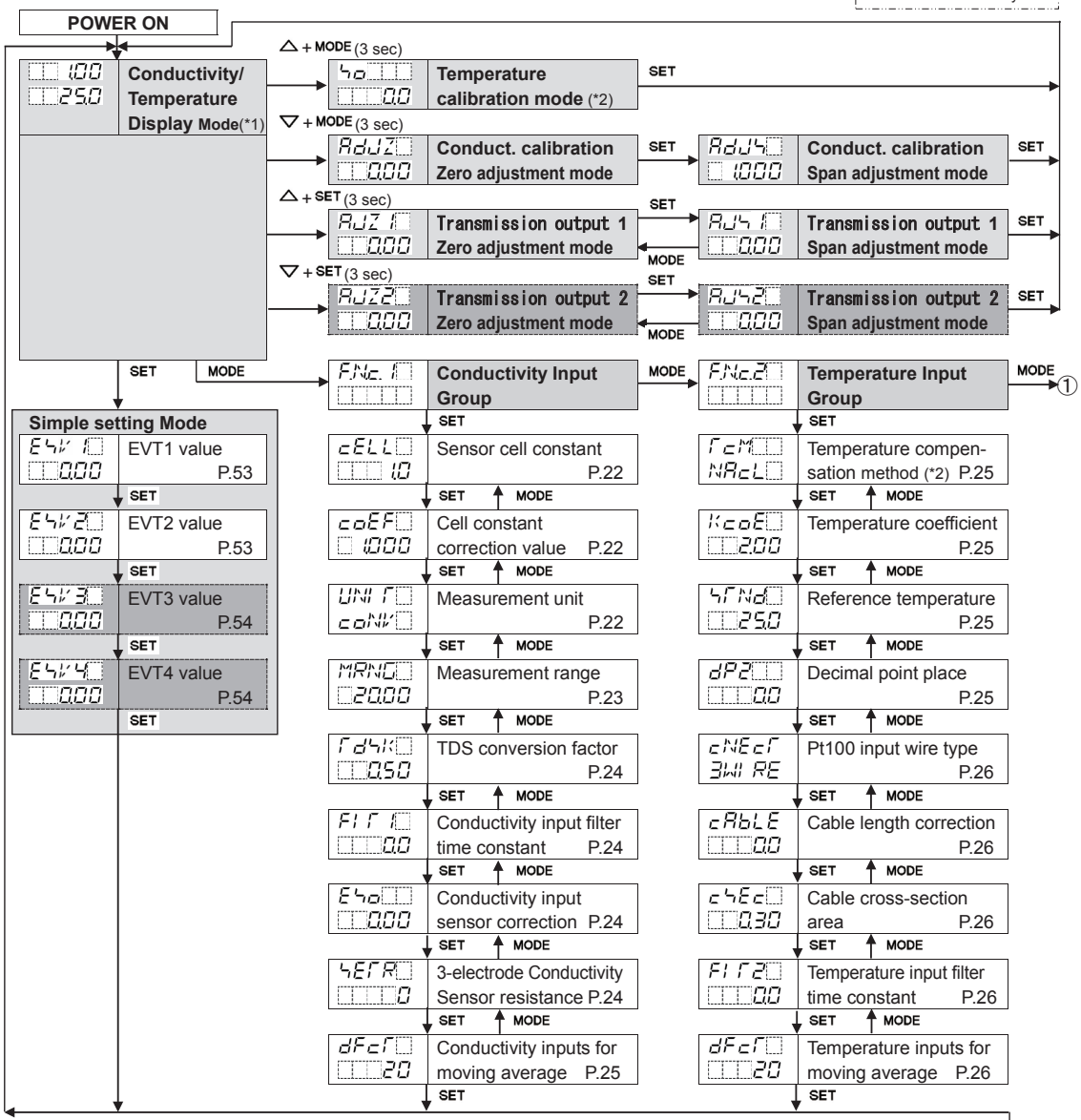

[About Setting Items]

EVT1 value P.53

EVT3 value P.54

- **Upper left**: Conductivity Display: Indicates the setting item characters.
- **Lower left**: Temperature Display: Indicates the factory default.
- **Right side**: Indicates the setting item and reference page.

Setting item in shaded section will be displayed only when the corresponding option is ordered.

[About Each Mode and Setting Items]

(*1) Measurement starts, indicating the item selected in [Backlight selection (p.40)] in the Basic Function Group.

(*2) If oFF (No temperature compensation) is selected in [Temperature compensation method (p.25)] in the Temperature Input Group, and if oFF (Unlit) or 5rd (Reference temperature) is selected in [Temperature Display when no temperature compensation (P.41)] in the Basic Function Group, the unit does not move to Temperature Calibration mode.

[About Key Operation]

- △ + MODE (3 sec): Press and hold the △ and MODE keys (in that order) together for 3 sec. The unit enters the next mode.
- ▽ + MODE (3 sec): Press and hold the ▽ and MODE keys (in that order) together for 3 sec. The unit enters the next mode.
- △ + SET (3 sec): Press and hold the △ and SET keys (in that order) together for 3 sec. The unit enters the next mode.
- ▽ + SET (3 sec): Press and hold the ▽ and SET keys (in that order) together for 3 sec. The unit enters the next mode.
- SET, MODE Press the SET or MODE key. The unit will proceed to the next setting item, illustrated by an arrow.
- To revert to Conductivity/Temperature Display Mode, press and hold the MODE key for 3 seconds while in any mode.

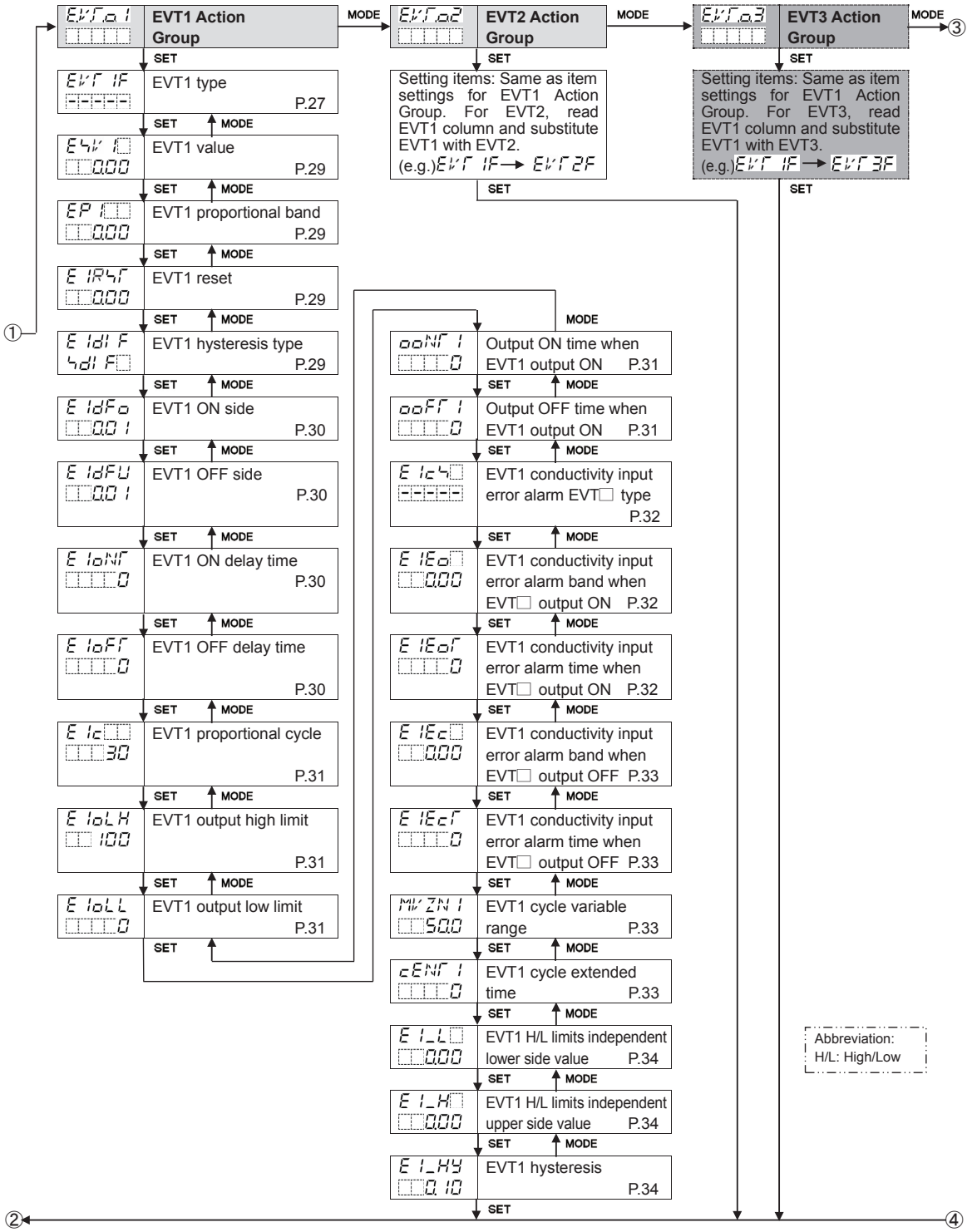
EVT.a1
EVT1 Action Group
MODE
EVT.a2
EVT2 Action Group
MODE
EVT.a3
EVT3 Action Group
MODE
③
SET
EVT 1F
EVT1 type
P.27
SET
MODE
EV 1□
0.00
EVT1 value
P.29
EP 1□
0.00
EVT1 proportional band
P.29
E 1RST
0.00
EVT1 reset
P.29
E 1dl F
HdI F□
EVT1 hysteresis type
P.29
E 1dFo
0.0 1
EVT1 ON side
P.30
E 1dFU
0.0 1
EVT1 OFF side
P.30
E 1oNT
0
EVT1 ON delay time
P.30
E 1oFT
0
EVT1 OFF delay time
P.30
E 1c□□
30
EVT1 proportional cycle
P.31
E 1oLH
100
EVT1 output high limit
P.31
E 1oLL
0
EVT1 output low limit
P.31
Setting items: Same as item settings for EVT1 Action Group. For EVT2, read EVT1 column and substitute EVT1 with EVT2.
(e.g.)EVT 1F → EVT2F
Setting items: Same as item settings for EVT1 Action Group. For EVT3, read EVT1 column and substitute EVT1 with EVT3.
(e.g.)EVT 1F → EVT3F
①
②
④
oNT 1
0
Output ON time when EVT1 output ON P.31
oFT 1
0
Output OFF time when EVT1 output ON P.31
E 1c4□
EVT1 conductivity input error alarm EVT□ type
P.32
E 1Eo□
0.00
EVT1 conductivity input error alarm band when EVT□ output ON P.32
E 1EoT
0
EVT1 conductivity input error alarm time when EVT□ output ON P.32
E 1Ec□
0.00
EVT1 conductivity input error alarm band when EVT□ output OFF P.33
E 1EcT
0
EVT1 conductivity input error alarm time when EVT□ output OFF P.33
MVZN 1
50.0
EVT1 cycle variable range P.33
cENT 1
0
EVT1 cycle extended time P.33
E 1_L□
0.00
EVT1 H/L limits independent lower side value P.34
E 1_H□
0.00
EVT1 H/L limits independent upper side value P.34
E 1_HY
0.10
EVT1 hysteresis
P.34
Abbreviation:
H/L: High/Low

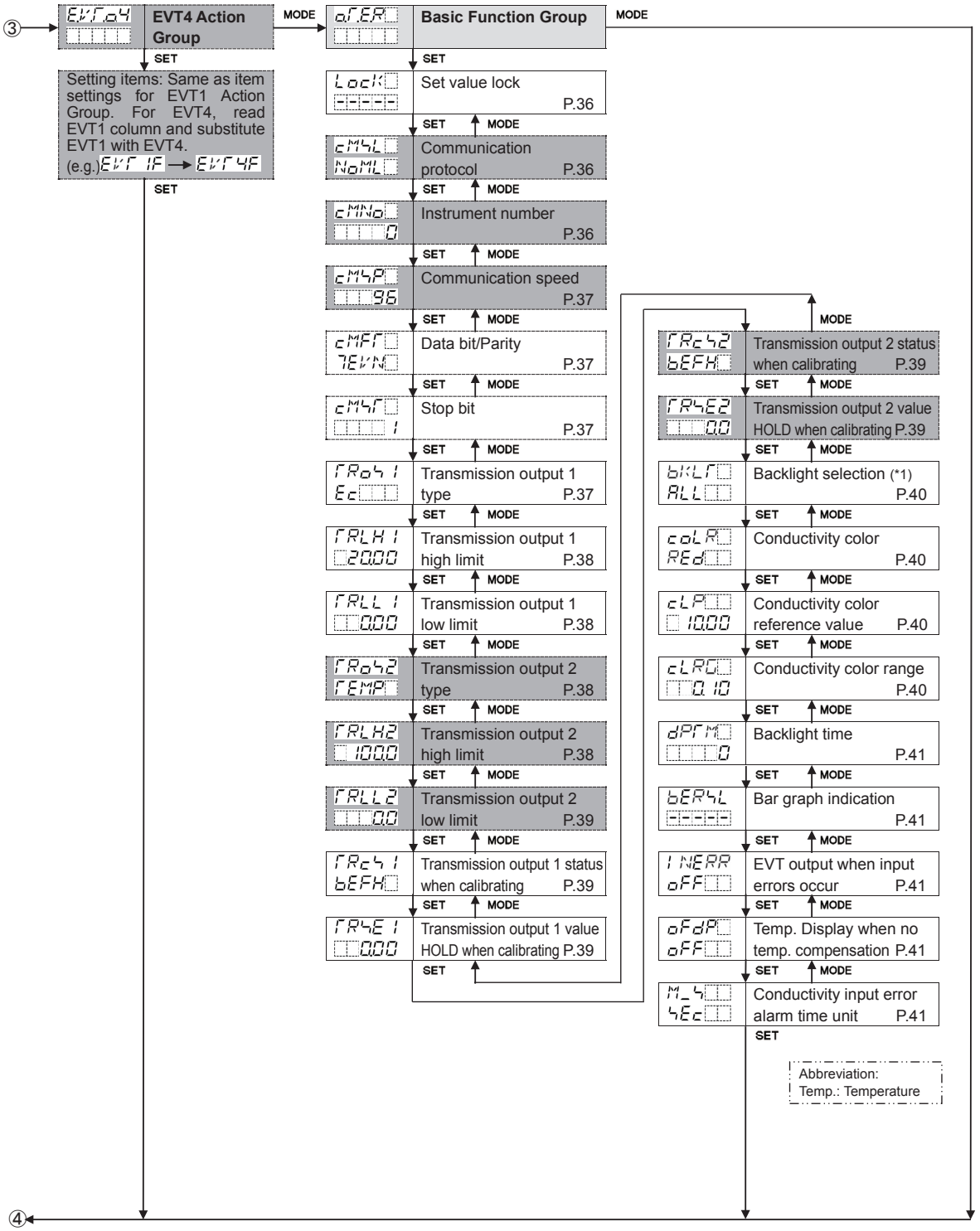
③
EVT.04
EVT4 Action Group
MODE
oTER
Basic Function Group
MODE
SET
Setting items: Same as item settings for EVT1 Action Group. For EVT4, read EVT1 column and substitute EVT1 with EVT4.
(e.g.)EVT 1F → EVT 4F
SET
Lock
Set value lock
P.36
SET
MODE
cMdL
NoML
Communication protocol
P.36
cMNo
0
Instrument number
P.36
cMdP
96
Communication speed
P.37
cMFT
7EVN
Data bit/Parity
P.37
cMdT
1
Stop bit
P.37
TRo1
Ec
Transmission output 1 type
P.37
TRLH1
20.00
Transmission output 1 high limit
P.38
TRLL1
0.00
Transmission output 1 low limit
P.38
TRo2
TEMP
Transmission output 2 type
P.38
TRLH2
100.0
Transmission output 2 high limit
P.38
TRLL2
0.0
Transmission output 2 low limit
P.39
TRc1
bEFH
Transmission output 1 status when calibrating
P.39
TRtE1
0.00
Transmission output 1 value HOLD when calibrating
P.39
TRc2
bEFH
Transmission output 2 status when calibrating
P.39
TRtE2
0.0
Transmission output 2 value HOLD when calibrating
P.39
bKLT
ALL
Backlight selection (*1)
P.40
coLR
REd
Conductivity color
P.40
cLP
10.00
Conductivity color reference value
P.40
cLRG
0.10
Conductivity color range
P.40
dPTM
0
Backlight time
P.41
bERL
Bar graph indication
P.41
INERR
oFF
EVT output when input errors occur
P.41
oFdP
oFF
Temp. display when no temp. compensation
P.41
M_t
tEc
Conductivity input error alarm time unit
P.41
Abbreviation:
Temp.: Temperature
④

7. Setup

Setup should be done before using this instrument according to the user's conditions:
Setting the Conductivity input, Temperature input, EVT1, EVT2, EVT3 (EVT3 option) and EVT4 (EVT3 option) types, Serial communication (C5 option), Transmission output 1, Transmission output 2 (TA2 option), and Indication settings (Backlight selection, Conductivity color, etc.)

Setup can be conducted in the Conductivity Input Group, Temperature Input Group, EVT1, EVT2, EVT3, EVT4 Action Groups and Basic Function Group.

If the user's specification is the same as the factory default of the AER-102-ECH, or if setup has already been complete, it is not necessary to set up the instrument. Proceed to Section "8. Calibration (p.42)".

7.1 Turn the Power Supply to the AER-102-ECH ON.

For approx. 4 seconds after the power is switched ON, the following characters are indicated on the Conductivity Display and Temperature Display.

Display	Character	Measurement Unit	
Conductivity Display	coNU	Conductivity (mS/cm, μS/cm)	
	HI	Conductivity (S/m, mS/m)	
	SEA	Seawater salinity (%)	
	SALT	NaCl salinity (%)	
	tdS	TDS conversion (g/L, mg/L)	
Display	**Character**	**Input Temperature Spec.** (*)	**Selection Item in [Pt100 input wire type] (p.26)**
Temperature Display	Pt 2	Pt100	2WIRE: 2-wire type
	Pt 3		3WIRE: 3-wire type
	Pt 10	Pt1000	

(*) This input temperature specification was specified at the time of ordering.

During this time, all outputs are in OFF status, and action indicators are turned off. After that, measurement starts, indicating the item selected in [Backlight selection (p.40)].
This status is called Conductivity/Temperature Display Mode.

7.2 Conductivity Input Group

To enter the Conductivity Input Group, follow the procedure below.

① F.Nc. 1□ Press the MODE key in Conductivity/Temperature Display Mode.

② cELL□ Press the SET key.

The unit proceeds to the Conductivity Input Group, and "Sensor cell constant" will appear.

Character	Setting Item, Function, Setting Range	Factory Default
cELL□ □□□ 1.0	**Sensor cell constant** • Selects the sensor cell constant. **If cell constant is changed, Conductivity Zero and Span adjustment values, and Cell constant correction value will be cleared.** **Set the Cell constant correction value again, and re-calibrate Conductivity Zero and Span adjustment values.** • □□□ 1.0 : 1.0/cm □□ 10.0 : 10.0/cm	1.0/cm
coEF□ □ 1.000	**Cell constant correction value** • Sets sensor cell constant correction value. coEF□ and conductivity value are displayed alternately. • Setting range: 0.001 to 5.000	1.000
UNIT□ coNC□	**Measurement unit** • Selects the conductivity unit. **If conductivity unit is changed, Conductivity Zero and Span adjustment values will be cleared.** **Re-calibrate Conductivity Zero and Span adjustment values.** **However, if the following is changed, Conductivity Span adjustment value will not be cleared. Re-calibrate only Conductivity Zero adjustment value.** **• When changing from Conductivity (mS/cm, S/m) to Seawater salinity (%) or NaCl salinity (%)** **• When changing from Seawater salinity (%) or NaCl salinity (%) to Conductivity (mS/cm, S/m)** **• When changing from Seawater salinity (%) to NaCl salinity (%)** • coNC□ : Conductivity (mS/cm, μS/cm) SI □□□ : Conductivity (S/m, mS/m) SEA□ : Seawater salinity (%) SALT□ : NaCl salinity (%) Tds□□ : TDS conversion (g/L, mg/L)	Conductivity (mS/cm, μS/cm)

Character	Setting Item, Function, Setting Range	Factory Default
MRNG□ □20.00	**Measurement range** • Selects the conductivity measurement range. **If measurement range is changed, Conductivity Zero and Span adjustment values will be cleared.** **Re-calibrate the Conductivity Zero and Span adjustment values.** • Selection item differs depending on the selection of sensor cell constant and measurement unit. **When sensor cell constant 1.0/cm is selected:** **(Table 7.2-1)**	20.00 mS/cm

Measurement Unit	Selection Item	Measurement Range
Conductivity (mS/cm, μS/cm)	□20.00	0.00 to 20.00 mS/cm
	□200.0	0.0 to 200.0 mS/cm
	□500.0	0.0 to 500.0 mS/cm
	□□500	0 to 500 mS/cm
	□2.000	0.000 to 2.000 mS/cm
	□5.000	0.000 to 5.000 mS/cm
	□50.00	0.00 to 50.00 mS/cm
	□2000	0 to 2000 μS/cm
	□5000	0 to 5000 μS/cm
Conductivity (S/m, mS/m)	□2.000	0.000 to 2.000 S/m
	□20.00	0.00 to 20.00 S/m
	□50.00	0.00 to 50.00 S/m
	□□50.0	0.0 to 50.0 S/m
	□2000	0 to 2000 mS/m
	□5.000	0.000 to 5.000 S/m
	□200.0	0.0 to 200.0 mS/m
	□500.0	0.0 to 500.0 mS/m
TDS conversion (g/L, mg/L)	□□20.0	0.0 to 20.0 g/L
	□□200	0 to 200 g/L
	□□500	0 to 500 g/L
	□2000	0 to 2000 mg/L
	□5000	0 to 5000 mg/L
Seawater salinity (%)	□□4.00	0.00 to 4.00%
NaCl salinity (%)	□20.00	0.00 to 20.00%

Character	Setting Item, Function, Setting Range	Factory Default

When sensor cell constant 10.0/cm is selected:
(Table 7.2-2)

Measurement Unit	Selection Item	Measurement Range
Conductivity (mS/cm, μS/cm)	□200.0	0.0 to 200.0 mS/cm
	□500.0	0.0 to 500.0 mS/cm
	□2000	0 to 2000 mS/cm
Conductivity (S/m, mS/m)	□20.00	0.00 to 20.00 S/m
	□50.00	0.00 to 50.00 S/m
	□200.0	0.0 to 200.0 S/m
TDS conversion (g/L, mg/L)	□□200	0 to 200 g/L
	□□500	0 to 500 g/L
	□2000	0 to 2000 g/L
Seawater salinity (%)	□□4.00	0.00 to 4.00%
NaCl salinity (%)	□20.00	0.00 to 20.00%

Fdk□ □□0.50	**TDS conversion factor** • Sets TDS conversion factor. • Available only when Fdk□□ [TDS conversion (g/L)] is selected in [Measurement unit]. • Setting range: 0.30 to 1.00	0.50
FIL□ □□□0.0	**Conductivity input filter time constant** • Sets Conductivity input filter time constant. If the value is set too large, it affects EVT action due to the delay of response. Refer to “Conductivity (Temperature) Filter Time Constant” on p.26. • Setting range: 0.0 to 10.0 seconds	0.0 seconds
Eco□□ □□0.00	**Conductivity input sensor correction** • Sets conductivity input sensor correction value. This corrects the input value from the conductivity sensor. When a sensor cannot be set at the exact location where measurement is desired, conductivity measured by the sensor may deviate from the conductivity in the measured location. In this case, desired conductivity can be obtained by adding a sensor correction value. However, it is only effective within the measurement range regardless of the sensor correction value. Conductivity after sensor correction= Current conductivity + (Sensor correction value) • Setting range: ±10% of measurement span (*)	0.00 mS/cm
3ERR□ □□□□0	**3-electrode Conductivity Sensor resistance** • If the 3-electrode Conductivity Sensor is used, set the resistance value of 3-electrode Conductivity Sensor. • Setting range: 0 to 100 Ω	0 Ω

(*) The measurement unit and decimal point place follow the measurement range.

Character	Setting Item, Function, Setting Range	Factory Default
dFcT □□□20	**Conductivity inputs for moving average** • Sets the number of conductivity inputs used to obtain moving average. An average conductivity input value is calculated using the selected number of conductivity inputs. The conductivity input value is replaced every input sampling period. However, the conductivity input moving average function is disabled in conductivity calibration mode or in temperature calibration mode. • Setting range: 1 to 120	20

7.3 Temperature Input Group

To enter the Temperature Input Group, follow the procedure below.

① F.Nc.2□ Press the MODE key twice in Conductivity/Temperature Display Mode.

② TcM□□ Press the SET key.

The unit enters the Temperature Input Group, and "Temperature compensation method" will appear.

Character	Setting Item, Function, Setting Range	Factory Default
TcM□□ NAcL□	**Temperature compensation method** • Selects Temperature compensation calculation method. • NAcL□: Temperature compensation is conducted using temperature characteristics of NaCl. Select when the main ingredient of salt included in a sample is NaCl. TcoE□: Temperature compensation is conducted using temperature coefficient (%/℃) and randomly selected reference temperature. oFF□□: No temperature compensation	NaCl
KcoE□ □□2.00	**Temperature coefficient** • Sets Temperature coefficient. If Temperature coefficient is set to 2.00 %/℃, this value can be used for most aqueous solutions. If Temperature coefficient of an aqueous solution is known, set the value. If Temperature coefficient is set to 0.00 %/℃, conductivity without temperature compensation will be indicated. • Available only when TcoE□ is selected in [Temperature compensation method]. • Setting range: -5.00 to 5.00 %/℃	2.00 %/℃
rTNd□ □□25.0	**Reference temperature** • Sets the reference temperature for temperature compensation. • Setting range: 5.0 to 95.0℃	25.0℃
dP2□□ □□□0.0	**Decimal point place** • Selects decimal point position to be indicated on the Temperature Display. • □□□□0 : No decimal point □□□0.0 : 1 digit after decimal point	1 digit after decimal point

Character	Setting Item, Function, Setting Range	Factory Default
cNEcT 3WI RE	**Pt100 input wire type** • Selects the input wire type of Pt100. • Not available for 4-electrode Conductivity Sensor (Temperature element Pt1000). • 2WI RE: 2-wire type 3WI RE: 3-wire type	3-wire type
cAbLE □□□0.0	**Cable length correction** • Sets the cable length correction value. • Available when 2WI RE (2-wire type) is selected in [Pt100 input wire type]. Not available for 4-electrode Conductivity Sensor (Temperature element Pt1000). • Setting range: 0.0 to 100.0 m	0.0 m
cSEc□ □□0.30	**Cable cross-section area** • Sets the cable cross-section area. • Available when 2WI RE (2-wire type) is selected in [Pt100 input wire type]. Not available for 4-electrode Conductivity Sensor (Temperature element Pt1000). • Setting range: 0.10 to 2.00 mm^2	0.30 mm^2
FIT2□ □□□0.0	**Temperature input filter time constant** • Sets Temperature input filter time constant. If the value is set too large, it affects EVT action due to the delay of response. Refer to "Conductivity (Temperature) Filter Time Constant" below. • Setting range: 0.0 to 10.0 seconds	0.0 seconds
dFcT□ □□□20	**Temperature inputs for moving average** • Sets the number of temperature inputs used to obtain moving average. An average temperature input value is calculated using the selected number of temperature inputs. The temperature input value is replaced every input sampling period. However, the temperature input moving average function is disabled in temperature calibration mode. • Setting range: 1 to 120	20

• Conductivity (Temperature) Filter Time Constant

Even when conductivity (temperature) measured value before filter process changes as shown in (Fig. 7.3-1), if the filter time constant "T" is set, the conductivity (temperature) measured value changes as shown in (Fig. 7.3-2) so that conductivity (temperature) measured value after finishing filter process can reach 63% (of the desired value) after T seconds have passed. If the filter time constant is set too large, it affects EVT action due to the delay of response.

(e.g.) In case the LSD (least significant digit) of the conductivity (temperature) measured value prior to filter process is fluctuating, it can be suppressed by using the filter time constant.

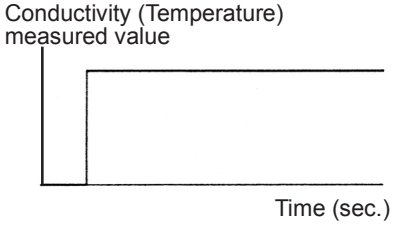

(Fig. 7.3-1)

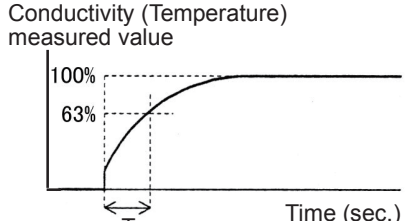

(Fig. 7.3-2)

7.4 EVT1 Action Group

To enter the EVT1 Action Group, follow the procedure below.

If Transmission output 2 (TA2 option) is ordered, this group will not be available.

① E.V.T.o.1 Press the MODE key 3 times in Conductivity/Temperature Display Mode.

② EVT IF Press the SET key.

The unit proceeds to the EVT1 Action Group, and “EVT1 type” will appear.

Character	Setting Item, Function, Setting Range	Factory Default
EVT IF ----- **EVT1 type** • Selects an EVT1 output (Contact output 1) type. (Fig. 7.4-1) (p.28) **Note:** **If EVT1 type is changed, EVT1 value defaults to 0.00 or 0.0.** • If oFF (No temperature compensation) is selected in [Temperature compensation method (p.25)], EVT1 action will be disabled even if Temperature input low limit or Temperature input high limit action is selected. • ----- : No action Ec_L : Conductivity input low limit action Ec_H : Conductivity input high limit action TEMPL : Temperature input low limit action TEMPH : Temperature input high limit action ERoUT : Error output [When the error type is “Error” (Table 7.4-1), the output is turned ON.] FAIL : Fail output [When the error type is “Fail” (Table 7.4-1), the output is turned ON.] EEUL : Conductivity input error alarm output Ec_HL : Conductivity input High/Low limits independent action TEMHL : Temperature input High/Low limits independent action • **Error output, Fail output (Table 7.4-1)**	No action

Error Type	Error Contents	Description
Fail	Temperature sensor burnout	Temperature sensor lead wire is burnt out.
Fail	Temperature sensor short-circuited	Temperature sensor lead wire is short-circuited.
Error	Outside temperature compensation range	Measured temperature has exceeded 110.0℃.
Error	Outside temperature compensation range	Measured temperature is less than 0.0℃.

• **EVT1 Action**

EVT1 Type	P Control Action	ON/OFF Control Action
Conductivity input low limit action, Temperature input low limit action (Activated based on indication value)	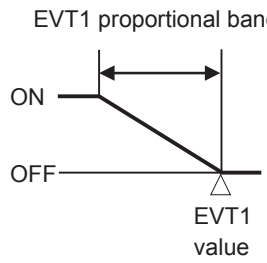	If Medium Value is selected in [EVT1 hysteresis type]: 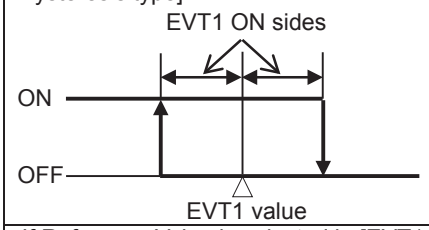 If Reference Value is selected in [EVT1 hysteresis type]: 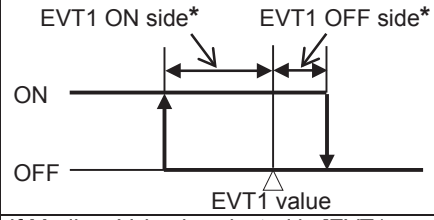
Conductivity input high limit action, Temperature input high limit action (Activated based on indication value)	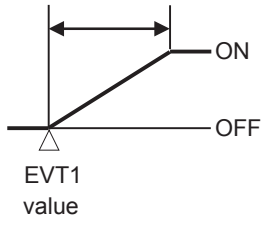	If Medium Value is selected in [EVT1 hysteresis type]: 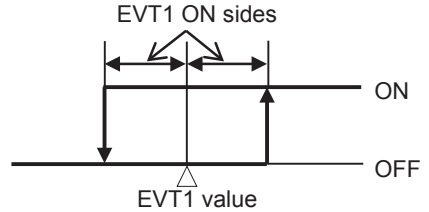 If Reference Value is selected in [EVT1 hysteresis type]: 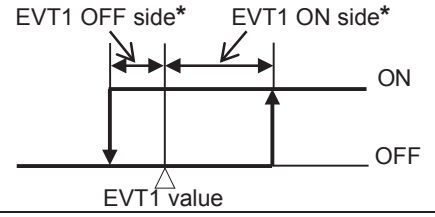

*** Setting Example:**
If [EVT1 ON side (E 1dFo)] is set to 0.00 or 0.0, EVT1 output can be turned ON at the value set in [EVT1 value (EVr 1)].
If [EVT1 OFF side (E 1dFU)] is set to 0.00 or 0.0, EVT1 output can be turned OFF at the value set in [EVT1 value (EVr 1)].

EVT1 Type	ON/OFF Control Action
Conductivity input High/Low limits independent action, Temperature input High/Low limits independent action (Activated based on indication value)	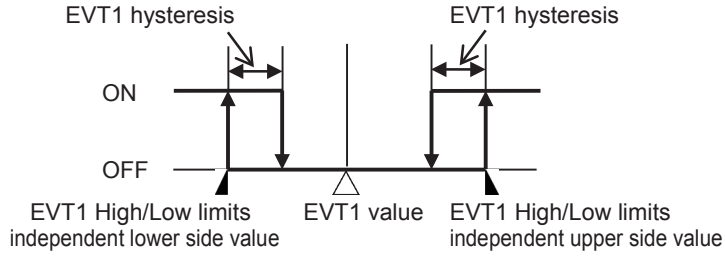

(Fig. 7.4-1)

Character	Setting Item, Function, Setting Range	Factory Default
EV1 1 □□0.00	**EVT1 value**	Conductivity input: Measurement range low limit Temperature input: 0.0℃
	• Sets EVT1 value. (Fig. 7.4-1) (p.28) • Not available if -------- (No action), EROUT (Error output), FAIL□ (Fail output) or EEUL□ (Conductivity input error alarm output) is selected in [EVT1 type]. • Setting range: Conductivity input: Measurement range low limit to Measurement range high limit (*1) Temperature input: 0.0 to 100.0℃ (*2)	
EP 1□□ □□0.00	**EVT1 proportional band**	Conductivity input: Measurement range low limit Temperature input: 0.0℃
	• Sets EVT1 proportional band. (Fig. 7.4-1) (p.28) ON/OFF control action when set to 0.00 or 0.0. • Not available if -------- (No action), EROUT (Error output), FAIL□ (Fail output) or EEUL□ (Conductivity input error alarm output) is selected in [EVT1 type]. • Setting range: Conductivity input: Measurement range low limit to Measurement range high limit (*1) Temperature input: 0.0 to 100.0℃ (*2)	
E 1RST □□0.00	**EVT1 reset**	Conductivity input: 0.00 mS/cm Temperature input: 0.0℃
	• Sets EVT1 reset value. • Not available if -------- (No action), EROUT (Error output), FAIL□ (Fail output) or EEUL□ (Conductivity input error alarm output) is selected in [EVT1 type]. • Not available for the ON/OFF control action. • Setting range: Conductivity input: ±10% of measurement span (*1) Temperature input: ±10.0℃ (*2)	
E 1dIF HdIF□	**EVT1 hysteresis type**	Reference Value
	• Selects EVT1 output hysteresis type (Medium or Reference Value). (Fig. 7.4-1) (p.28) • Not available if -------- (No action), EROUT (Error output), FAIL□ (Fail output) or EEUL□ (Conductivity input error alarm output) is selected in [EVT1 type]. • Not available for the P control action. • cdIF□: Medium Value Sets the same value for both ON and OFF sides in relation to EVT1 value. Only ON side needs to be set. HdIF□: Reference Value Sets individual values for ON and OFF sides in relation to EVT1 value. Both ON and OFF sides need to be set individually.	

(*1) The measurement unit and decimal point place follow the measurement range.
(*2) The decimal point place does not follow the selection. It is fixed.

Character	Setting Item, Function, Setting Range	Factory Default
E 1dFo □□0.01	**EVT1 ON side** • Sets the span of EVT1 ON side. (Fig. 7.4-1) (p.28) If cdl F□ (Medium Value) is selected in [EVT1 hysteresis type], the span of ON/OFF side will be the same value. • Not available if -----(No action), EroUr (Error output), FAI L□ (Fail output) or EEUL□ (Conductivity input error alarm output) is selected in [EVT1 type]. • Not available for the P control action. • Setting range: Conductivity input: 0.00 to 20% of Measurement range high limit (*1) Temperature input: 0.0 to 10.0℃ (*2)	Conductivity input: 0.01 mS/cm Temperature input: 1.0℃
E 1dFU □□0.01	**EVT1 OFF side** • Sets the span of EVT1 OFF side. (Fig. 7.4-1) (p.28) • Not available if -----(No action), EroUr (Error output), FAI L□ (Fail output) or EEUL□ (Conductivity input error alarm output) is selected in [EVT1 type]. • Not available for the P control action, or if cdl F□ (Medium Value) is selected in [EVT1 hysteresis type]. • Setting range: Conductivity input: 0.00 to 20% of Measurement range high limit (*1) Temperature input: 0.0 to 10.0℃ (*2)	Conductivity input: 0.01 mS/cm Temperature input: 1.0℃
E 1oNT □□□□0	**EVT1 ON delay time** • Sets EVT1 ON delay time. The EVT1 output does not turn ON (under the conditions of turning ON) until the time set in [EVT1 ON delay time] elapses. • Not available if -----(No action), EroUr (Error output), FAI L□ (Fail output) or EEUL□ (Conductivity input error alarm output) is selected in [EVT1 type]. • Not available for the P control action. • Setting range: 0 to 10000 seconds	0 seconds
E 1oFT □□□□0	**EVT1 OFF delay time** • Sets EVT1 OFF delay time. The EVT1 output does not turn OFF (under the conditions of turning OFF) until the time set in [EVT1 OFF delay time] elapses. • Not available if -----(No action), EroUr (Error output), FAI L□ (Fail output) or EEUL□ (Conductivity input error alarm output) is selected in [EVT1 type]. • Not available for the P control action. • Setting range: 0 to 10000 seconds	0 seconds

(*1) The measurement unit and decimal point place follow the measurement range.
(*2) The decimal point place does not follow the selection. It is fixed.

Character	Setting Item, Function, Setting Range	Factory Default
E 1cPP PPP30	**EVT1 proportional cycle** • Sets EVT1 proportional cycle. • Not available if -----(No action), EroUr (Error output), FAI LP (Fail output) or EEULP (Conductivity input error alarm output) is selected in [EVT1 type]. • Not available for the ON/OFF control action. • Setting range: 1 to 300 seconds	30 seconds
E 1oLH PP 100	**EVT1 output high limit** • Sets EVT1 output high limit value. • Not available if -----(No action), EroUr (Error output), FAI LP (Fail output) or EEULP (Conductivity input error alarm output) is selected in [EVT1 type]. • Not available for the ON/OFF control action. • Setting range: EVT1 output low limit to 100%	100%
E 1oLL PPPP0	**EVT1 output low limit** • Sets EVT1 output low limit value. • Not available if -----(No action), EroUr (Error output), FAI LP (Fail output) or EEULP (Conductivity input error alarm output) is selected in [EVT1 type]. • Not available for the ON/OFF control action. • Setting range: 0% to EVT1 output high limit	0%
ooN1 1 PPPP0	**Output ON Time when EVT1 output ON** • Sets Output ON time when EVT1 output is ON. If ON time and OFF time are set, EVT1 output can be turned ON/OFF in a configured cycle when EVT1 output is ON. (Fig. 7.4-2) (p.32) • Not available if -----(No action), EroUr (Error output), FAI LP (Fail output) or EEULP (Conductivity input error alarm output) is selected in [EVT1 type]. • Not available for P control action. • Setting range: 0 to 10000 seconds	0 seconds
ooF1 1 PPPP0	**Output OFF Time when EVT1 output ON** • Sets Output OFF time when EVT1 output is ON. If ON time and OFF time are set, EVT1 output can be turned ON/OFF in a configured cycle when EVT1 output is ON. (Fig. 7.4-2) (p.32) • Not available if -----(No action), EroUr (Error output), FAI LP (Fail output) or EEULP (Conductivity input error alarm output) is selected in [EVT1 type]. • Not available for P control action. • Setting range: 0 to 10000 seconds	0 seconds

Character	Setting Item, Function, Setting Range	Factory Default
	Timing chart (Output ON time and OFF time when EVT1 output is ON) 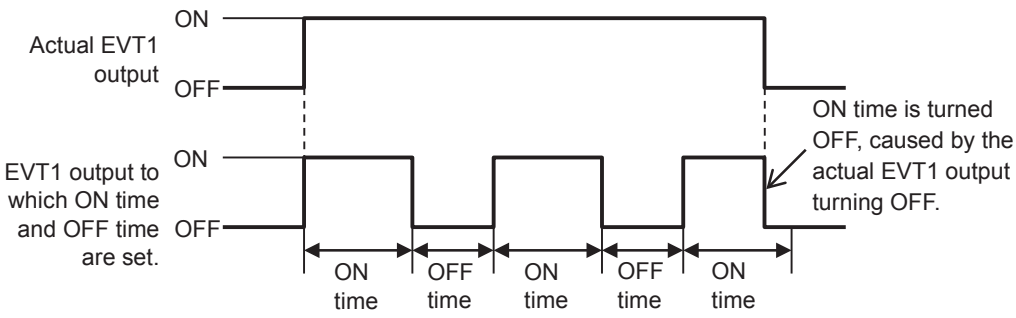 (Fig. 7.4-2)	
E1c4□ -----□	**EVT1 conductivity input error alarm EVT□ type** • Selects EVT□ output type (except EVT1 type) in order to assess EVT1 conductivity input error alarm. • Available only when EEUL□ (Conductivity input error alarm output) is selected in [EVT1 type]. • -----□ : No action EVT2□ : EVT2 type EVT3□ : EVT3 type EVT4□ : EVT4 type	No action
E1Ed□ □□0.00	**EVT1 conductivity input error alarm band when EVT□ output ON** • Sets band to assess EVT1 conductivity input error alarm when EVT□ output (selected in [EVT1 conductivity input error alarm EVT□ type]) is ON. • Available only when EEUL□ (Conductivity input error alarm output) is selected in [EVT1 type]. • Setting range: Measurement range low limit to Measurement range high limit (*1) When set to 0.00, Conductivity input error alarm is disabled.	Measurement range low limit
E1Edr □□□□0	**EVT1 conductivity input error alarm time when EVT□ output ON** • Sets time to assess EVT1 conductivity input error alarm when EVT□ output (selected in [EVT1 conductivity input error alarm EVT□ type]) is ON. • Available only when EEUL□ (Conductivity input error alarm output) is selected in [EVT1 type]. • Setting range: 0 to 10000 seconds or minutes (*2) When set to 0, Conductivity input error alarm is disabled.	0 seconds

(*1) The measurement unit and decimal point place follow the measurement range.
(*2) Time unit follows the selection in [Conductivity input error alarm time unit].

Character	Setting Item, Function, Setting Range	Factory Default
E IEc□ □□0.00	**EVT1 conductivity input error alarm band when EVT□ output OFF** • Sets band to assess EVT1 conductivity input error alarm when EVT□ output (selected in [EVT1 conductivity input error alarm EVT□ type]) is OFF. • Available only when EEUL□ (Conductivity input error alarm output) is selected in [EVT1 type]. • Setting range: Measurement range low limit to Measurement range high limit (*1) When set to 0.00, Conductivity input error alarm is disabled.	Measurement range low limit
E IEcT □□□□0	**EVT1 conductivity input error alarm time when EVT□ output OFF** • Sets time to assess EVT1 conductivity input error alarm when EVT□ output (selected in [EVT1 conductivity input error alarm EVT□ type]) is OFF. • Available only when EEUL□ (Conductivity input error alarm output) is selected in [EVT1 type]. • Setting range: 0 to 10000 seconds or minutes (*2) When set to 0, Conductivity input error alarm is disabled.	0 seconds
MVZN 1 □□50.0	**EVT1 cycle variable range** • Sets EVT1 cycle variable range. • Not available if ------ (No action), EROUT (Error output), FAIL□ (Fail output) or EEUL□ (Conductivity input error alarm output) is selected in [EVT1 type]. • Not available for the ON/OFF control action. • Setting range: 1.0 to 100.0%	50.0%
cENT 1 □□□□0	**EVT1 cycle extended time** • Sets EVT1 cycle extended time. • Not available if ------ (No action), EROUT (Error output), FAIL□ (Fail output) or EEUL□ (Conductivity input error alarm output) is selected in [EVT1 type]. • Not available for the ON/OFF control action. • Setting range: 0 to 300 seconds	0 seconds

(*1) The measurement unit and decimal point place follow the measurement range.
(*2) Time unit follows the selection in [Conductivity input error alarm time unit].

Character	Setting Item, Function, Setting Range	Factory Default
E 1_L 0.00	**EVT1 High/Low limits independent lower side value**	Conductivity input: Measurement range low limit Temperature input: 0.0℃
	• Sets the lower side value of EVT1 High/Low limits independent action. (Fig. 7.4-1)(p.28) Disabled when set to 0.00 or 0.0℃. • Available when Ec_HL (Conductivity input High/Low limits independent action) or TEMHL (Temperature input High/Low limits independent action) is selected in [EVT1 type]. • Setting range: Conductivity input: Measurement range low limit to Measurement range high limit (*1) Temperature input: 0.0 to 100.0℃ (*2)	
E 1_H 0.00	**EVT1 High/Low limits independent upper side value**	Conductivity input: Measurement range low limit Temperature input: 0.0℃
	• Sets the upper side value of EVT1 High/Low limits independent action. (Fig. 7.4-1)(p.28) Disabled when set to 0.00 or 0.0℃. • Available when Ec_HL (Conductivity input High/Low limits independent action) or TEMHL (Temperature input High/Low limits independent action) is selected in [EVT1 type]. • Setting range: Conductivity input: Measurement range low limit to Measurement range high limit (*1) Temperature input: 0.0 to 100.0℃ (*2)	
E 1_HY 0.01	**EVT1 hysteresis**	Conductivity input : 0.01 mS/cm Temperature input: 1.0℃
	• Sets hysteresis of EVT1 High/Low limits independent action. (Fig. 7.4-1)(p.28) • Available when Ec_HL (Conductivity input High/Low limits independent action) or TEMHL (Temperature input High/Low limits independent action) is selected in [EVT1 type]. • Setting range: Conductivity input: 0.01 to 20% of Measurement range high limit (*1) Temperature input: 0.1 to 10.0℃ (*2)	

(*1) The measurement unit and decimal point place follow the measurement range.
(*2) The decimal point place does not follow the selection. It is fixed.

7.5 EVT2 Action Group

To enter the EVT2 Action Group, follow the procedure below.

① EVT.a2 Press the MODE key 4 times in Conductivity/Temperature Display Mode.

② EVT2F Press the SET key.
The unit proceeds to the EVT2 Action Group, and ”EVT2 type“ appears.

Action, indication condition and setting range of the EVT2 Action Group are the same as those of EVT1 Action Group.
Substitute EVT1 with EVT2, and refer to the EVT1 Action Group (pp. 27 to 34).

(e.g.) EVT 1F → EVT2F
EHY 1□ → EHY2□

7.6 EVT3 Action Group

EVT3 Action Group is indicated only when EVT3, EVT4 outputs (EVT3 option) are/is ordered.

To enter the EVT3 Action Group, follow the procedure below.

① EVT.a3 Press the MODE key 5 times in Conductivity/Temperature Display Mode.

② EVT3F Press the SET key.
The unit proceeds to the EVT3 Action Group, and ”EVT3 type“ appears.

Action, indication condition and setting range of the EVT3 Action Group are the same as those of EVT1 Action Group.
Substitute EVT1 with EVT3, and refer to the EVT1 Action Group (pp. 27 to 34).

(e.g.) EVT 1F → EVT3F
EHY 1□ → EHY3□

7.7 EVT4 Action Group

EVT4 Action Group is indicated only when EVT3, EVT4 outputs (EVT3 option) are/is ordered.

To enter the EVT4 Action Group, follow the procedure below.

① EVT.a4 Press the MODE key 6 times in Conductivity/Temperature Display Mode.

② EVT4F Press the SET key.
The unit proceeds to the EVT4 Action Group, and ”EVT4 type“ appears.

Action, indication condition and setting range of the EVT4 Action Group are the same as those of EVT1 Action Group.
Substitute EVT1 with EVT4, and refer to the EVT1 Action Group (pp. 27 to 34).

(e.g.) EVT 1F → EVT4F
EHY 1□ → EHY4□

7.8 Basic Function Group

To enter the Basic Function Group, follow the procedure below.

① aT.E.R Press the MODE key 5 times in Conductivity/Temperature Display Mode. If EVT3, EVT4 outputs (EVT3 option) are/is ordered, press the MODE key 7 times in Conductivity/Temperature Display Mode.

② Lock Press the SET key.

The unit enters the Basic Function Group, and the “Set value lock” will appear.

Character	Setting Item, Function, Setting Range	Factory Default
Lock -----	**Set value lock** • Locks the set values to prevent setting errors. • ----- (Unlock): All set values can be changed. Lock 1 (Lock 1) : None of the set values can be changed. Lock2 (Lock 2) : Only EVT1, EVT2, EVT3, EVT4 values can be changed. Lock3 (Lock 3) : All set values – except Sensor cell constant, Measurement unit, Measurement range, Conductivity Zero and Span adjustment values, Temperature calibration value, Transmission output 1 Zero and Span adjustment values, Transmission output 2 Zero and Span adjustment values – can be temporarily changed. However, they revert to their previous value after the power is turned off because they are not saved in the non-volatile IC memory. Do not change setting items (EVT1, EVT2, EVT3, EVT4 types). If they are changed, they will affect other setting items. Be sure to select Lock 3 when changing the set value frequently via software communication. (If the value set by the software communication is the same as the value before the setting, the value will not be written in the non-volatile IC memory.)	Unlock
cMnL NoML	**Communication protocol** • Selects communication protocol. • Available when the Serial communication (C5) option is ordered. • NoML : Shinko protocol ModA : MODBUS ASCII mode ModR : MODBUS RTU mode	Shinko protocol
cMNo 0000	**Instrument number** • Sets the instrument number of this unit. (The instrument numbers should be set one by one when multiple instruments are connected, otherwise communication is impossible.) • Available when the Serial communication (C5) option is ordered. • Setting range: 0 to 95	0

Character	Setting Item, Function, Setting Range	Factory Default
cMSP □□96	**Communication speed** • Selects a communication speed equal to that of the host computer. • Available when the Serial communication (C5) option is ordered. • □□96 : 9600 bps □□192 : 19200 bps □□384 : 38400 bps	9600 bps
cMFT 7EVN	**Data bit/Parity** • Selects data bit and parity. • Available when the Serial communication (C5) option is ordered. • 8NoN : 8 bits/No parity 7NoN : 7 bits/No parity 8EVN : 8 bits/Even 7EVN : 7 bits/Even 8odd : 8 bits/Odd 7odd : 7 bits/Odd	7 bits/Even
cMST □□□1	**Stop bit** • Selects the stop bit. • Available when the Serial communication (C5) option is ordered. • □□□1 : 1 bit □□□2 : 2 bits	1 bit
tRo1 Ec□□	**Transmission output 1 type** • Selects Transmission output 1 type. • If oFF□□ (No temperature compensation) is selected in [Temperature compensation method (p.25)], and if TEMP□ (Temperature transmission) is selected, Transmission output 1 value will differ depending on the selection in [Temperature Display when no temperature compensation (p.41)] as follows. • If oFF□□ (Unlit) or STd□□ (Reference temperature) is selected, the value set in [Reference temperature (p.25)] will be output. • If PV□□□ (Measured value) is selected, the measured value will be output. • Ec□□□: Conductivity transmission TEMP□: Temperature transmission MV 1□□: EVT1 MV transmission (*1) MV2□□: EVT2 MV transmission MV3□□: EVT3 MV transmission (*2) MV4□□: EVT4 MV transmission (*2)	Conductivity transmission

(*1) Not available when Transmission output 2 (TA2 option) is ordered.
(*2) Available when EVT3, EVT4 outputs (EVT3 option) are/is ordered.

Character	Setting Item, Function, Setting Range	Factory Default
rLH1 □20.00	**Transmission output 1 high limit**	Conductivity transmission: Measurement range high limit Temperature transmission: 100.0℃ MV transmission: 100.0%
	• Sets Transmission output 1 high limit value. (This value correponds to 20 mA DC output.). If Transmission output 1 high limit and low limit are set to the same value, Transmission output 1 will be fixed at 4 mA DC. • Setting range: Conductivity transmission: Transmission output 1 low limit to Measurement range high limit (*1) Temperature transmission: Transmission output 1 low limit to 100.0℃(*2) MV transmission: Transmission output 1 low limit to 100.0%	
rLL1 □□0.00	**Transmission output 1 low limit**	Conductivity transmission: Measurement range low limit Temperature transmission: 0.0℃ MV transmission: 0.0%
	• Sets Transmission output 1 low limit value. (This value correponds to 4 mA DC output.). If Transmission output 1 high limit and low limit are set to the same value, Transmission output 1 will be fixed at 4 mA DC. • Setting Range: Conductivity transmission: Measurement range low limit to Transmission output 1 high limit (*1) Temperature transmission: 0.0℃ to Transmission output 1 high limit (*2) MV transmission: 0.0% to Transmission output 1 high limit	
rRo2 rEMP□	**Transmission output 2 type**	Temperature transmission
	• Selects Transmission output 2 type. • If oFF□□ (No temperature compensation) is selected in [Temperature compensation method (p.25)], and if rEMP□ (Temperature transmission) is selected, Transmission output 2 value will differ depending on the selection in [Temperature Display when no temperature compensation (p.41)] as follows. • If oFF□□(Unlit) or Srd□□(Reference temperature) is selected, the value set in [Reference temperature (p.25)] will be output. • If PV□□□ (Measured value) is selected, the measured value will be output. • Ec□□□: Conductivity transmission rEMP□: Temperature transmission MV2□□: EVT2 MV transmission MV3□□: EVT3 MV transmission (*3) MV4□□: EVT4 MV transmission (*3)	
rLH2 □ 100.0	**Transmission output 2 high limit**	Conductivity transmission: Measurement range high limit Temperature transmission: 100.0℃ MV transmission: 100.0%
	• Sets Transmission output 2 high limit value. (This value correponds to 20 mA DC output.). If Transmission output 2 high limit and low limit are set to the same value, Transmission output 2 will be fixed at 4 mA DC. • Setting range: Conductivity transmission: Transmission output 2 low limit to Measurement range high limit (*1) Temperature transmission: Transmission output 2 low limit to 100.0℃(*2) MV transmission: Transmission output 2 low limit to 100.0%	

(*1) The measurement unit and decimal point place follow the measurement range.
(*2) The decimal point place does not follow the selection. It is fixed.
(*3) Available when EVT3, EVT4 outputs (EVT3 option) are/is ordered.

Character	Setting Item, Function, Setting Range	Factory Default
rLL2 □□□0.0	**Transmission output 2 low limit**	Conductivity transmission: Measurement range low limit Temperature transmission: 0.0℃ MV transmission: 0.0%
	• Sets Transmission output 2 low limit value. (This value correponds to 4 mA DC output.). If Transmission output 2 high limit and low limit are set to the same value, Transmission output 2 will be fixed at 4 mA DC. • Setting Range: Conductivity transmission: Measurement range low limit to Transmission output 2 high limit (*1) Temperature transmission: 0.0℃ to Transmission output 2 high limit (*2) MV transmission: 0.0% to Transmission output 2 high limit	
rCh1 bEFH□	**Transmission output 1 status when calibrating**	Last value HOLD
	• Selects Transmission output 1 status when calibrating conductivity. • bEFH□: Last value HOLD (Retains the last value before conductivity calibration, and outputs it.) SEtH□: Set value HOLD (Outputs the value set in [Transmission output 1 value HOLD when calibrating].) PVH□□: Measured value (Outputs the measured value when calibrating conductivity.)	
rh1E1 □□0.00	**Transmission output 1 value HOLD when calibrating**	Conductivity transmission: Measurement range low limit Temperature transmission: 0.0℃ MV transmission: 0.0%
	• Sets Transmission output 1 value HOLD. • Available only when SEtH□ (Set value HOLD) is selected in [Transmission output 1 status when calibrating]. • Setting range: Conductivity transmission: Measurement range low limit to high limit (*1) Temperature transmission: 0.0 to 100.0℃ (*2) MV transmission: 0.0 to 100.0%	
rCh2 bEFH□	**Transmission output 2 status when calibrating**	Last value HOLD
	• Selects Transmission output 2 status when calibrating conductivity. • bEFH□: Last value HOLD (Retains the last value before conductivity calibration, and outputs it.) SEtH□: Set value HOLD (Outputs the value set in [Transmission output 2 value HOLD when calibrating].) PVH□□: Measured value (Outputs the measured value when calibrating conductivity.)	
rh2E2 □□□0.0	**Transmission output 2 value HOLD when calibrating**	Conductivity transmission: Measurement range low limit Temperature transmission: 0.0℃ MV transmission: 0.0%
	• Sets Transmission output 2 value HOLD. • Available only when SEtH□ (Set value HOLD) is selected in [Transmission output 2 status when calibrating]. • Setting range Conductivity transmission: Measurement range low limit to high limit (*1) Temperature transmission: 0.0 to 100.0℃ (*2) MV transmission: 0.0 to 100.0%	

(*1) The measurement unit and decimal point place follow the measurement range.
(*2) The decimal point place does not follow the selection. It is fixed.

Character	Setting Item, Function, Setting Range	Factory Default
bKLT ALL	**Backlight selection** • Selects the display to backlight. • ALL : All are backlit. Ec : Conductivity Display TEMP : Temperature Display Ac : Action indicators EcTMP : Conductivity Display + Temperature Display EcAc : Conductivity Display + Action indicators TMPAc : Temperature Display + Action indicators	All are backlit
coLR REd	**Conductivity color** • Selects a color for the Conductivity Display. • GRN : Green REd : Red oRG : Orange EcGR : Conductivity color changes continuously (Fig. 7.8-1). The Conductivity Display color changes according to [Conductivity color reference value] and [Conductivity color range] settings. • When conductivity is lower than [Conductivity color reference value] – [Conductivity color range]: Orange • When conductivity is within [Conductivity color reference value] ± [Conductivity color range]: Green • When conductivity is higher than [Conductivity color reference value] + [Conductivity color range]: Red 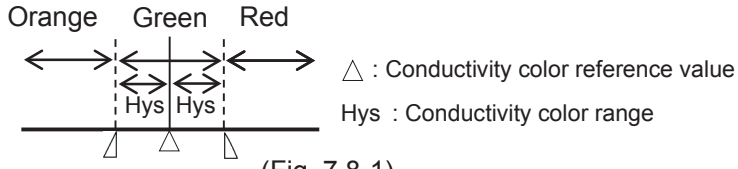 (Fig. 7.8-1)	Red
cLP 10.00	**Conductivity color reference value** • Sets a reference value for conductivity color to be green when EcGR (Conductivity color changes continuously) is selected in [Conductivity color]. • Setting range: 0.00 to Measurement range high limit (*)	50% of Measurement range high limit
cLRG 0.10	**Conductivity color range** • Sets a range for Conductivity color to be green when EcGR (Conductivity color changes continuously) is selected in [Conductivity color]. • Setting range: 0.10 to Measurement range high limit (*)	0.10 mS/cm

(*) The measurement unit and decimal point place follow the measurement range.

Character	Setting Item, Function, Setting Range	Factory Default
dPTM□ □□□□0	**Backlight time** • Sets time to backlight from no operation status until backlight is switched off. When set to 0, the backlight remains ON. Backlight relights by pressing any key while backlight is OFF. • Setting range: 0 to 99 minutes	0 minutes
bERL -□-□-□-	**Bar graph indication** • Selects bar graph indication. • -□-□-□-: No indication TRoT 1: Transmission output 1 TRoT2: Transmission output 2 Segments will light in accordance with the output. Scale is -5 to 105%. Segments will light from left to right in accordance with the output. When output is 50% -5% 50% 105% Lights from left to the right in accordance with the output. (Fig. 7.8-2)	No indication
INERR oFF□□	**EVT output when input errors occur** • If input errors occur, such as conductivity sensor is burnt out or short-circuited, EVT output Enabled/Disabled can be selected. If "Enabled" is selected, EVT output will be maintained when input errors occur. If "Disabled" is selected, EVT output will be turned OFF when input errors occur. • Available when Ec_L□ (Conductivity input low limit action), Ec_H□ (Conductivity input high limit action), TEMPL (Temperature input low limit action), or TEMPH (Temperature input high limit action) is selected in [EVT□ type]. • oFF□□ : Disabled oN□□□ : Enabled	Disabled
oFdP□ oFF□□	**Temperature Display when no temperature compensation** • Selects an item to be indicated on the Temperature Display when oFF□□ (No temperature compensation) is selected in [Temperature compensation method (p.25)]. • Available when oFF□□ (No temperature compensation) is selected in [Temperature compensation method (p.25)]. • oFF□□: Unlit rFd□□: Reference temperature Temperature set in [Reference temperature (p.25)] will be indicated. PV□□□: Measured value	Unlit
M_t□□ tEc□□	**Conductivity input error alarm time unit** • Selects conductivity input error alarm time unit. • Selection item: tEc□□: Second(s) MIN□□: Minute(s)	Second(s)

8. Calibration

Conductivity and Temperature Calibration modes, Transmission output 1 and 2 adjustment modes are described below.

8.1 Conductivity Calibration Mode

Deterioration of the 4-electrode Conductivity Sensor might cause the cell constant to change. To correct the changed cell constant, calibration is required.
Calibrate Conductivity Zero adjustment first, followed by Conductivity Span adjustment.
However, if Lock1 (Lock 1), Lock2 (Lock 2) or Lock3 (Lock 3) is selected in [Set value lock (p.36)], the unit cannot move to Conductivity Calibration mode.

The following outlines the procedure for conductivity calibration.

① When selecting bEFH (Last value HOLD) in [Transmission output 1 status when calibrating (p.39)] or in [Transmission output 2 status when calibrating (p.39)], select it while the 4-electrode Conductivity Sensor is being immersed in the solution currently calibrated.

② At this stage, do not immerse the 4-elctrode Conductivity Sensor in the standard solution.

③ Press and hold the ▽ key and MODE key (in that order) together for 3 seconds in Conductivity/Temperature Display Mode.
The unit enters [Conductivity calibration Zero adjustment mode], and indicates the following.

Display	Indication
Conductivity Display	AdJ2 and conductivity are indicated alternately.
Temperature Display	Conductivity Zero adjustment value

④ Set the Conductivity Zero adjustment value with the △ or ▽ key so that conductivity becomes 0 (zero).
If conductivity is 0 (zero), this adjustment is not necessary.
The setting range of Conductivity Zero adjustment value differs depending on the measurement range. (Table 8.1-1) (p.43)
However, it is only effective within the measurement range regardless of conductivity Zero adjustment value.

⑤ Press the SET key.
Conductivity Zero adjustment value will be registered, and the unit enters [Conductivity calibration Span adjustment mode], and indicates the following.

Display	Indication
Conductivity Display	AdJ4 and conductivity are indicated alternately.
Temperature Display	Conductivity Span adjustment value

⑥ Immerse the 4-electrode Conductivity Sensor in the standard solution.

(Table 8.1-1)

Measurement Range		Conductivity Zero Adjustment Value Setting Range
Cell constant 1.0/cm	0.00 to 20.00 mS/cm	-2.00 to 2.00
	0.0 to 200.0 mS/cm	-20.0 to 20.0
	0.0 to 500.0 mS/cm	-50.0 to 50.0
	0 to 500 mS/cm	-50 to 50
	0.000 to 2.000 mS/cm	-0.200 to 0.200
	0.000 to 5.000 mS/cm	-0.500 to 0.500
	0.00 to 50.00 mS/cm	-5.00 to 5.00
	0 to 2000 μS/cm	-200 to 200
	0 to 5000 μS/cm	-500 to 500
	0.000 to 2.000 S/m	-0.200 to 0.200
	0.00 to 20.00 S/m	-2.00 to 2.00
	0.00 to 50.00 S/m	-5.00 to 5.00
	0.0 to 50.0 S/m	-5.0 to 5.0
	0 to 2000 mS/m	-200 to 200
	0.000 to 5.000 S/m	-0.500 to 0.500
	0.0 to 200.0 mS/m	-20.0 to 20.0
	0.0 to 500.0 mS/m	-50.0 to 50.0
	0.0 to 20.0 g/L	-2.0 to 2.0
	0 to 200 g/L	-20 to 20
	0 to 500 g/L	-50 to 50
	0 to 2000 mg/L	-200 to 200
	0 to 5000 mg/L	-500 to 500
Cell constant 10.0/cm	0.0 to 200.0 mS/cm	-20.0 to 20.0
	0.0 to 500.0 mS/cm	-50.0 to 50.0
	0 to 2000 mS/cm	-200 to 200
	0.00 to 20.00 S/m	-2.00 to 2.00
	0.00 to 50.00 S/m	-5.00 to 5.00
	0.0 to 200.0 S/m	-20.0 to 20.0
	0 to 200 g/L	-20 to 20
	0 to 500 g/L	-50 to 50
	0 to 2000 g/L	-200 to 200
Seawater salinity 0.00 to 4.00%		-0.40 to 0.40
NaCl salinity 0.00 to 20.00%		-2.00 to 2.00

⑦ Set the Conductivity Span adjustment value with the △ or ▽ key while checking the conductivity.
Conductivity Span adjustment value: 0.700 to 1.300

⑧ Press the SET key.
Conductivity Span adjustment value will be registered, and the unit reverts to Conductivity/Temperature Display Mode.

8.2 Temperature Calibration Mode

To calibrate a temperature, set a temperature calibration value.
If oFF (No temperature compensation) is selected in [Temperature compensation method (p.25)], and if oFF (Unlit) or rEd (Reference temperature) is selected in [Temperature Display when no temperature compensation (p.41)], Temperature Calibration mode is not available.

When a sensor cannot be set at the exact location where measurement is desired, the resulting measured temperature may deviate from the temperature in the desired location. In this case, the desired temperature can be set for the desired location by setting a temperature calibration value. However, it is only effective within the input rated range regardless of the temperature calibration value.
Temperature after calibration = Current temperature + (Temperature calibration value)
(e.g.) When current temperature is 23.5℃,
If temperature calibration value is set to 1.5℃: 23.5 + (1.5) = 25.0℃
If temperature calibration value is set to -1.5℃: 23.5 + (-1.5) = 22.0℃

The following outlines the procedure for Temperature calibration.

① Press and hold the △ key and MODE key (in that order) together for 3 seconds in Conductivity/Temperature Display Mode.
The unit will proceed to Temperature Calibration mode, and indicates the following.

Display	Indication
Conductivity Display	to and temperature are indicated alternately.
Temperature Display	Temperature calibration value

② Set a temperature calibration value with the △ or ▽ key, while checking the temperature.
Setting range: -10.0 to 10.0℃

③ Press the SET key.
Temperature calibration is complete, and the unit reverts to Conductivity/ Temperature Display Mode.

8.3 Transmission Output 1 Adjustment Mode

Fine adjustment of Transmission output 1 is performed.
The AER-102-ECH is adjusted at the factory, however, differences may occur between the indication value of the connected equipment (recorders, etc.) and output value of this instrument.
In this case, perform Transmission output 1 Zero adjustment and Span adjustments.

The unit cannot enter Transmission output 1 Zero adjustment mode in the following cases:

- During Conductivity Calibration mode or Temperature Calibration mode
- When Lock 1 (Lock 1), Lock2 (Lock 2) or Lock3 (Lock 3) is selected in [Set value lock (p.36)]

The following outlines the procedure for Transmission output 1 adjustment.

① Press and hold the △ key and SET key (in that order) together for 3 seconds in Conductivity/Temperature Display Mode.
The unit enters Transmission output 1 Zero adjustment mode, and indicates the following.

Display	Indication
Conductivity Display	AJ2 1□
Temperature Display	Transmission output 1 Zero adjustment value

② Set a Transmission output 1 Zero adjustment value with the △ or ▽ key, while viewing the value indicated on the connected equipment (recorders, etc.).
Setting range: ±5.00% of Transmission output 1 span

③ Press the SET key.
The unit enters Transmission output 1 Span adjustment mode, and indicates the following.

Display	Indication
Conductivity Display	AJ4 1□
Temperature Display	Transmission output 1 Span adjustment value

④ Set a Transmission output 1 Span adjustment value with the △ or ▽ key, while viewing the value indicated on the connected equipment (recorders, etc.).
Setting range: ±5.00% of Transmission output 1 span

⑤ Press the MODE key.
The unit reverts to Transmission output 1 Zero adjustment mode.
Repeat steps ② to ⑤ if necessary.

⑥ To finish Transmission output 1 adjustment, press the SET key in Transmission output 1 Span adjustment mode.
The unit reverts to Conductivity/Temperature Display Mode.

8.4 Transmission Output 2 Adjustment Mode

Fine adjustment of Transmission output 2 is performed.
The AER-102-ECH is adjusted at the factory, however, differences may occur between the indication value of the connected equipment (recorders, etc.) and output value of this instrument.
In this case, perform Transmission output 2 Zero adjustment and Span adjustments.

The unit cannot enter Transmission output 2 Zero adjustment mode in the following cases:

- During Conductivity Calibration mode or Temperature Calibration mode
- When Lock 1 (Lock 1), Lock2 (Lock 2) or Lock3 (Lock 3) is selected in [Set value lock (p.36)]

The following outlines the procedure for Transmission output 2 adjustment.

① Press and hold the ▽ key and SET key (in that order) together for 3 seconds in Conductivity/Temperature Display Mode.
The unit enters Transmission output 2 Zero adjustment mode, and indicates the following.

Display	Indication
Conductivity Display	AJZ2
Temperature Display	Transmission output 2 Zero adjustment value

② Set a Transmission output 2 Zero adjustment value with the △ or ▽ key, while viewing the value indicated on the connected equipment (recorders, etc.).
Setting range: ±5.00% of Transmission output 2 span

③ Press the SET key.
The unit enters Transmission output 2 Span adjustment mode, and indicates the following.

Display	Indication
Conductivity Display	AJ42
Temperature Display	Transmission output 2 Span adjustment value

④ Set a Transmission output 2 Span adjustment value with the △ or ▽ key, while viewing the value indicated on the connected equipment (recorders, etc.).
Setting range: ±5.00% of Transmission output 2 span

⑤ Press the MODE key.
The unit reverts to Transmission output 2 Zero adjustment mode.
Repeat steps ② to ⑤ if necessary.

⑥ To finish Transmission output 2 adjustment, press the SET key in Transmission output 2 Span adjustment mode.
The unit reverts to Conductivity/Temperature Display Mode.

9. Measurement

9.1 Starting Measurement

After mounting to the control panel, wiring, setup and calibration are complete, turn the power to the instrument ON.

For approx. 4 seconds after the power is switched ON, the following characters are indicated on the Conductivity Display and Temperature Display.

Display	Character	Measurement Unit	
Conductivity Display	coNd	Conductivity (mS/cm, μS/cm)	
	SAL	Conductivity (S/m, mS/m)	
	SEA	Seawater salinity (%)	
	SALT	NaCl salinity (%)	
	TDS	TDS conversion (g/L, mg/L)	
Display	**Character**	**Input Temperature Specification (*)**	**Selection Item in [Pt100 Input Wire Type] (p.26)**
Temperature Display	Pt 2	Pt100	2WIRE: 2-wire type
	Pt 3		3WIRE: 3-wire type
	Pt 10	Pt1000	

(*) This input temperature specification was specified at the time of ordering.

During this time, all outputs are in OFF status, and action indicators are turned off. After that, measurement starts, indicating the item selected in [Backlight Selection (p.40)].

9.2 EVT1 to EVT4 Outputs

If Ec_L□ (Conductivity input low limit action), Ec_H□ (Conductivity input high limit action), TEMPL (Temperature input low limit action) or TEMPH (Temperature input high limit action) is selected in [EVT1 type (p.27)], the following action is activated.

The same applies to EVT2, EVT3 and EVT4.

• **EVT1 Action**

EVT1 Type	P Control Action	ON/OFF Control Action
Conductivity input low limit action, Temperature input low limit action (Activated based on indication value)	EVT1 proportional band 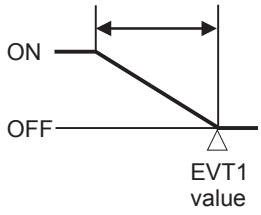	If Medium Value is selected in [EVT1 hysteresis type]: 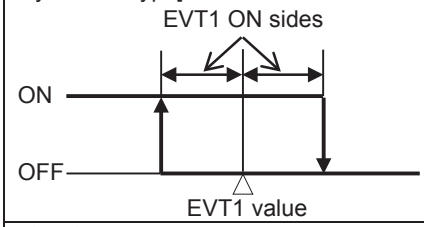 If Reference Value is selected in [EVT1 hysteresis type]: 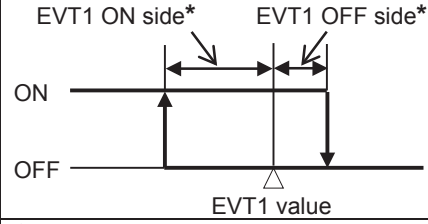
Conductivity input high limit action, Temperature input high limit action (Activated based on indication value)	EVT1 proportional band 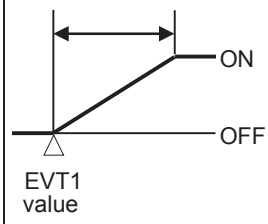	If Medium Value is selected in [EVT1 hysteresis type]: 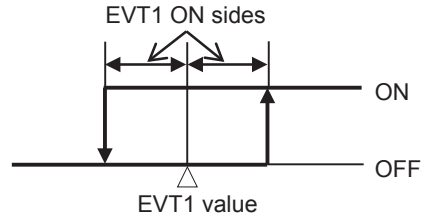 If Reference Value is selected in [EVT1 hysteresis type]: 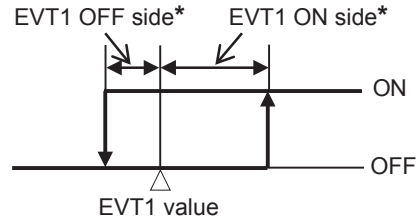

*** Setting Example:**

If [EVT1 ON side (E 1dFo)] is set to 0.00 or 0.0, EVT1 output can be turned ON at the value set in [EVT1 value (EV1 1□)].

If [EVT1 OFF side (E 1dFU)] is set to 0.00 or 0.0, EVT1 output can be turned OFF at the value set in [EVT1 value (EV1 1□)].

EVT1 Type	ON/OFF Control Action
Conductivity input High/Low limits independent action, Temperature input High/Low limits independent action (Activated based on indication value)	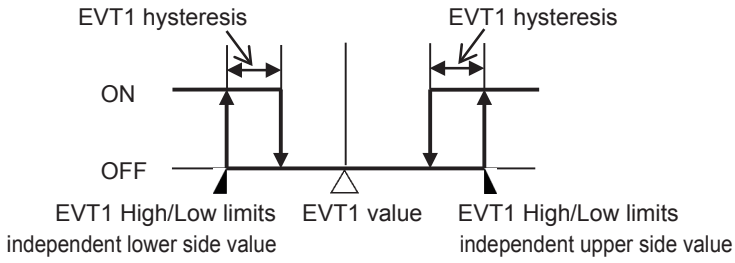

(Fig. 9.2-1)

• **P Control Action**

Within the proportional band, the manipulated variable is output in proportion to the deviation between the EVT1 value and measured value.

EVT1 Type	Description
Conductivity input low limit action, Temperature input low limit action	If measured value is lower than [EVT1 value – EVT1 proportional band], EVT1 output is turned ON. If measured value enters within the proportional band, EVT1 output is turned ON/OFF in EVT1 proportional cycles. If measured value exceeds the EVT1 value, EVT1 output is turned OFF.
Conductivity input high limit action, Temperature input high limit action	If measured value is higher than [EVT1 value + EVT1 proportional band], EVT1 output is turned ON. If measured value enters within the proportional band, EVT1 output is turned ON/OFF in EVT1 proportional cycles. If measured value drops below the EVT1 value, EVT1 output is turned OFF.

• **ON/OFF Control Action**

EVT1 Type	Description
Conductivity input low limit action, Temperature input low limit action	If measured value is lower than EVT1 value, EVT1 output is turned ON. If measured value exceeds the EVT1 value, EVT1 output is turned OFF.
Conductivity input high limit action, Temperature input high limit action	If measured value is higher than EVT1 value, EVT1 output is turned ON. If measured value drops below the EVT1 value, EVT1 output is turned OFF.

If ON time and OFF time are set in [Output ON time/OFF time when EVT1 output ON (p.31)], EVT1 output can be turned ON/OFF in a configured cycle when EVT1 output is ON.

Timing chart (Output ON time and OFF time when EVT1 output is ON)

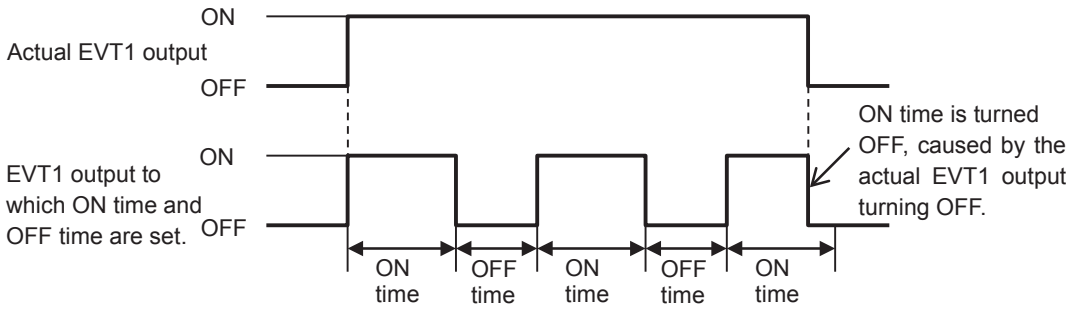

(Fig. 9.2-2)

EVT output status can be read by reading Status flag 2 (EVT1, EVT2, EVT3, EVT4 output flag bit) in Serial communication (C5 option).

EVT output status, when input errors occur, differs depending on the selection in [EVT output when input errors occur (p.41)].

- If oFF (Disabled) is selected, EVT output will be turned OFF when input errors occur.
- If oN (Enabled) is selected, EVT output will be maintained when input errors occur.

9.3 Error Output

If ErOUT (Error output) is selected in [EVT1 type (p.27)], and when the error type is "Error" in (Table 9.5-1), the EVT1 output is turned ON.

The same applies to EVT2, EVT3 and EVT4.

9.4 Fail Output

If FAIL (Fail output) is selected in [EVT1 type (p.27)], and when the error type is "Fail" in (Table 9.5-1), the EVT1 output is turned ON.

The same applies to EVT2, EVT3 and EVT4.

9.5 Conductivity Input Error Alarm

Conductivity input error alarm is used for detecting actuator trouble.
Even if conductivity input error alarm time has elapsed, and if conductivity input does not become higher than conductivity input error alarm band, the unit assumes that actuator trouble has occurred, and sets Status flag 2 (EVT1, EVT2, EVT3, EVT4 output flag bit).
In Serial communication, status can be read by reading Status flag 2 (EVT1, EVT2, EVT3, EVT4 output flag bit).

If EEUL□ (Conductivity input error alarm output) is selected in [EVT1 type (p.27)], the EVT1 output is turned ON.
The same applies to EVT2, EVT3 and EVT4.

Conductivity input error alarm is disabled in the following cases.

- During conductivity calibration
- When Conductivity input error alarm time is set to 0 (zero) seconds or minutes, or Conductivity input error alarm band is set to 0.00.

9.6 Cycle Automatic Variable Function

If deviation between EVT□ value and measured value enters EVT□ cycle variable range, the proportional cycle will be automatically extended in accordance with the deviation.

Proportional action OFF time will be extended, and ON/OFF ratio will be adjusted.

However, if EVT□ cycle extended time is set to 0 (zero) seconds, this function will be disabled.

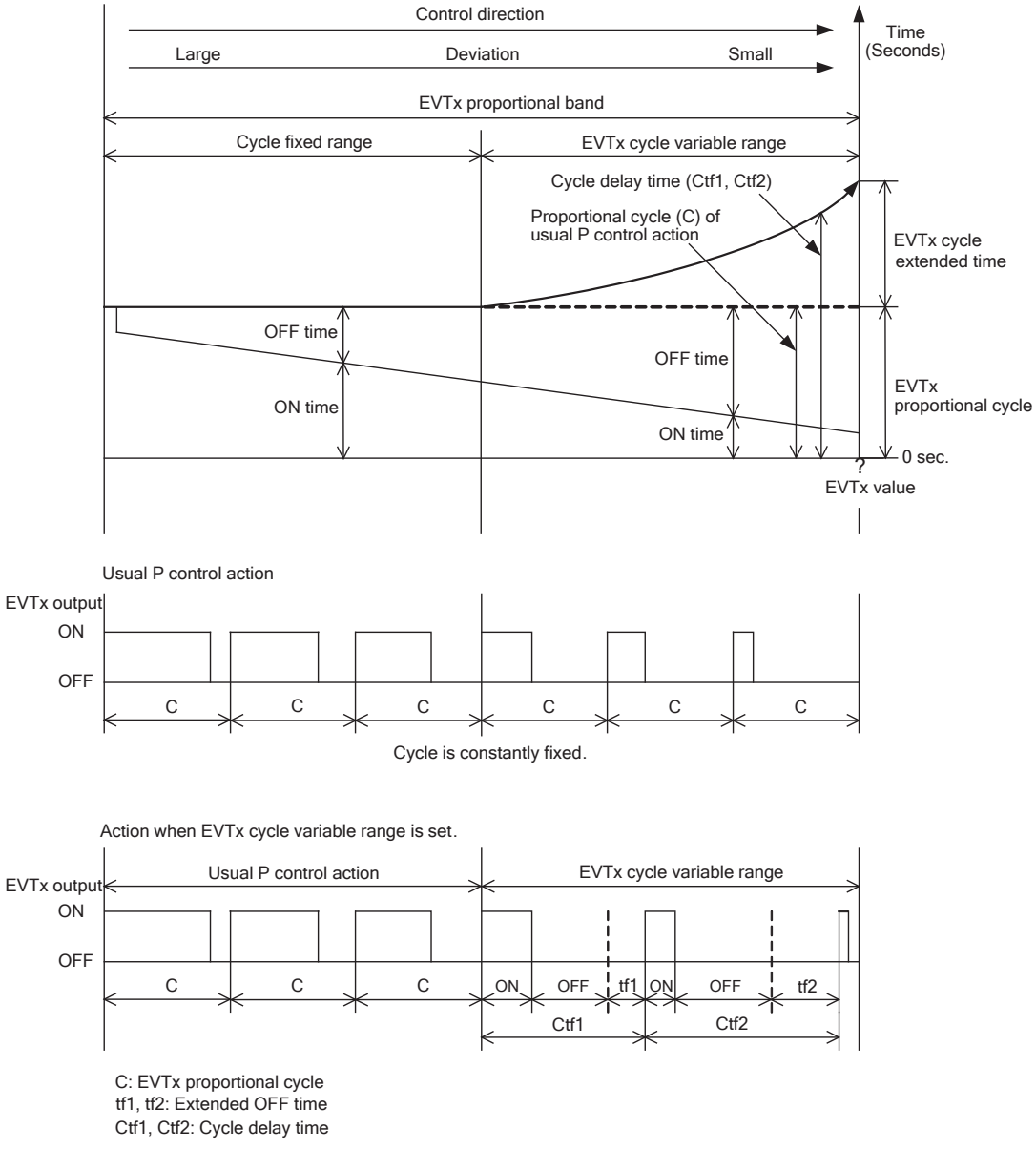

C: EVTx proportional cycle
tf1, tf2: Extended OFF time
Ctf1, Ctf2: Cycle delay time

(Fig. 9.6-1)

9.7 Error Code during Measurement

For temperature sensor error or outside temperature compensation range during measurement, their corresponding error codes flash on the Temperature Display as shown below in (Table 9.7-1).

(Table 9.7-1)

Error Code	Error Type	Error Contents	Description
ERR01	Fail	Temperature sensor burnout	Temperature sensor lead wire is burnt out.
ERR02	Fail	Temperature sensor short-circuited	Temperature sensor lead wire is short-circuited.
ERR03	Error	Outside temperature compensation range	Measured temperature has exceeded 110.0℃.
ERR04	Error	Outside temperature compensation range	Measured temperature is less than 0.0℃.

9.8 Setting EVT1 to EVT4 Values

EVT1 to EVT4 values can be set in Simple Setting mode.
These setting items are the same as those in EVT1 to EVT4 Action Groups.
To enter Simple Setting mode, follow the procedure below.

① EVT 1 Press the SET key in Conductivity/Temperature Display Mode. "EVT1 value" will be indicated.

② Set each setting item using the △ or ▽ key, and register the value with the SET key.

Character	Setting Item, Function, Setting Range	Factory Default
EVT 1 0.00	**EVT1 value** • Sets EVT1 value. • Not available if ------ (No action), EROUT (Error output), FAIL (Fail output) or EEUL (Conductivity input error alarm output) is selected in [EVT1 type (p.27)]. Not available if Transmission output 2 (TA2 option) is ordered. • Conductivity input: Measurement range low limit to Measurement range high limit (*1) Temperature input: 0.0 to 100.0℃ (*2)	Conductivity input: Measurement range low limit Temperature input: 0.0℃
EVT2 0.00	**EVT2 value** • Sets EVT2 value. • Not available if ------ (No action), EROUT (Error output), FAIL (Fail output) or EEUL (Conductivity input error alarm output) is selected in [EVT2 type (p.27)]. • Conductivity input: Measurement range low limit to Measurement range high limit (*1) Temperature input: 0.0 to 100.0℃ (*2)	Conductivity input: Measurement range low limit Temperature input: 0.0℃

(*1) The measurement unit and decimal point place follow the measurement range.
(*2) The decimal point place does not follow the selection. It is fixed.

Character	Setting Item, Function, Setting Range	Factory Default
EVT3 0.00	**EVT3 value** • Sets EVT3 value. • Not available if ----- (No action), ERoUT (Error output), FAIL (Fail output) or EEUL (Conductivity input error alarm output) is selected in [EVT3 type (p.27)]. • Available only when EVT3, EVT4 outputs (EVT3 option) are/is ordered. • Conductivity input: Measurement range low limit to Measurement range high limit (*1) Temperature input: 0.0 to 100.0℃ (*2)	Conductivity input: Measurement range low limit Temperature input: 0.0℃
EVT4 0.00	**EVT4 value** • Sets EVT4 value. • Not available if ----- (No action), ERoUT (Error output), FAIL (Fail output) or EEUL (Conductivity input error alarm output) is selected in [EVT4 type (p.27)]. • Available only when EVT3, EVT4 outputs (EVT3 option) are/is ordered. • Conductivity input: Measurement range low limit to Measurement range high limit (*1) Temperature input: 0.0 to 100.0℃ (*2)	Conductivity input: Measurement range low limit Temperature input: 0.0℃

(*1) The measurement unit and decimal point place follow the measurement range.

(*2) The decimal point place does not follow the selection. It is fixed.

③ Press the SET key. The unit reverts to Conductivity/Temperature Display Mode.

9.9 Transmission Output 1 and 2

Converting conductivity, temperature or MV to analog signal every input sampling period, outputs in current.

If oFF (No temperature compensation) is selected in [Temperature compensation method (p.25)], and if TEMP (Temperature transmission) is selected in [Transmission output 1 type (p.37)] or in [Transmission output 2 type (p.38)], Transmission output 1 or 2 value differs depending on the selection in [Temperature Display when no temperature compensation (p.41)].

- If oFF (Unlit) or Srd (Reference temperature) is selected, the value set in [Reference temperature (p.25)] will be output.
- If PV (Measured value) is selected, the measured value will be output.

If Transmission output 1 high limit and low limit are set to the same value, Transmission output 1 will be fixed at 4 mA DC.
If Transmission output 2 high limit and low limit are set to the same value, Transmission output 2 will be fixed at 4 mA DC.

Resolution	12000
Current	4 to 20 mA DC (Load resistance: Max. 550 Ω)
Output accuracy	Within ±0.3% of Transmission output 1 or 2 span

10. Specifications

10.1 Standard Specifications

Rating

Rated Scale	Input			Input Range	Resolution
	Conductivity	Conductivity	Cell constant 1.0/cm	0.00 to 20.00 mS/cm	0.01 mS/cm
				0.0 to 200.0 mS/cm	0.1 mS/cm
				0.0 to 500.0 mS/cm	0.1 mS/cm
				0 to 500 mS/cm	1 mS/cm
				0.000 to 2.000 mS/cm	0.001 mS/cm
				0.000 to 5.000 mS/cm	0.001 mS/cm
				0.00 to 50.00 mS/cm	0.01 mS/cm
				0 to 2000 μS/cm	1 μS/cm
				0 to 5000 μS/cm	1 μS/cm
				0.000 to 2.000 S/m	0.001 S/m
				0.00 to 20.00 S/m	0.01 S/m
				0.00 to 50.00 S/m	0.01 S/m
				0.0 to 50.0 S/m	0.1 S/m
				0 to 2000 mS//m	1 mS/m
				0.000 to 5.000 S/m	0.001 S/m
				0.0 to 200.0 mS/m	0.1 mS/m
				0.0 to 500.0 mS/m	0.1 mS/m
				0.0 to 20.0 g/L	0.1 g/L
				0 to 200 g/L	1 g/L
				0 to 500 g/L	1 g/L
				0 to 2000 mg/L	1 mg/L
				0 to 5000 mg/L	1 mg/L
			Cell constant 10.0/cm	0.0 to 200.0 mS/cm	0.1 mS/cm
				0.0 to 500.0 mS/cm	0.1 mS/cm
				0 to 2000 mS/cm	1 mS/cm
				0.00 to 20.00 S/m	0.01 S/m
				0.00 to 50.00 S/m	0.01 S/m
				0.0 to 200.0 S/m	0.1 S/m
				0 to 200 g/L	1 g/L
				0 to 500 g/L	1 g/L
				0 to 2000 g/L	1 g/L
		Seawater salinity		0.00 to 4.00%	0.01%
		NaCl salinity		0.00 to 20.00%	0.01%
	Temper-ature (*)	Pt100		0.0 to 100.0℃	0.1℃
		Pt1000		0.0 to 100.0℃	0.1℃
	(*) For the temperature indication, decimal point place can be selected.				

Input	4-electrode Conductivity Sensor (Temperature element Pt100) 4-electrode Conductivity Sensor (Temperature element Pt1000)		
Power Supply Voltage	**Model**	**AER-102-ECH**	**AER-102-ECH 1**
	Power supply voltage	100 to 240 V AC 50/60 Hz	24 V AC/DC 50/60 Hz
	Allowable voltage fluctuation range	85 to 264 V AC	20 to 28 V AC/DC

General Structure

External Dimensions	48 x 96 x 98.5 mm (W x H x D)	
Mounting	Flush (Applicable panel thickness: 1 to 8 mm)	
Case	Material: Flame-resistant resin, Color: Black	
Front Panel	Membrane sheet	
Drip-proof/Dust-proof	IP66 (for front panel only)	
Indication Structure	Displays	
	Conductivity Display	11-segment LCD display 5-digits Backlight: Red/Green/Orange Character size: 14.0 x 5.4 mm (H x W)
	Temperature Display	11-segment LCD display 5-digits Backlight: Green Character size: 10.0 x 4.6 mm (H x W)
	Output Display	22-segment LCD display Bar graph Backlight: Green
	Action indicators: Backlight: Orange color	
	EVT1	EVT1 output (Contact output 1) ON: Lit
	EVT2	EVT2 output (Contact output 2) ON: Lit
	EVT3	EVT3 output (Contact output 3) ON: Lit
	EVT4	EVT4 output (Contact output 4) ON: Lit
	T/R	During Serial communication TX output (transmitting): Lit
	LOCK	When Lock 1, 2 or 3 is selected: Lit
Setting Structure	Input system using membrane sheet key	

Indication Performance

Repeatability	Conductivity: ±0.5% of measurement span Salinity conversion: ±1% of measurement span TDS conversion: ±1.5% of measurement span
Linearity	Conductivity: ±0.5% of measurement span Salinity conversion: ±1% of measurement span TDS conversion: ±1.5% of measurement span
Indication Accuracy	Temperature: ±1℃
Input Sampling Period	250 ms (2 inputs)
Time Accuracy	Within ±1% of setting time

Standard Functions

Conductivity Calibration	Calibrate Conductivity Zero adjustment first, followed by Conductivity Span adjustment. If Lock 1 (Lock 1), Lock2 (Lock 2) or Lock3 (Lock 3) is selected in [Set value lock (p.36)], the unit can not proceed to Conductivity Calibration mode. In Conductivity Zero adjustment, adjustment is performed so that conductivity becomes 0 (zero), without immersing the 4-electrode Conductivity Sensor in the standard solution. In Conductivity Span adjustment, the 4-electrode Conductivity Sensor is immersed in the standard solution, and adjustment is performed, while checking conductivity. However, it is only effective within the measurement range regardless of the adjusted value.		
Temperature Calibration	When a sensor cannot be set at the exact location where measurement is desired, the resulting measured temperature may deviate from the temperature in the desired location. In this case, the desired temperature can be set for the desired location by setting a temperature calibration value. However, it is only effective within the input rated range regardless of the temperature calibration value.		
Transmission Output 1	Converting conductivity, temperature or MV to analog signal every input sampling period, and outputs the value in current. If oFF□□ (No temperature compensation) is selected in [Temperature compensation method (p.25)], and if TEMP□ (Temperature transmission) is selected in [Transmission output 1 type (p.37)], Transmission output 1 value will differ depending on the selection in [Temperature Display when no temperature compensation (p.41)] as follows. • If oFF□□ (Unlit) or Srd□□ (Reference temperature) is selected, the value set in [Reference temperature (p.25)] will be output. • If PV□□□ (Measured value) is selected, the measured value will be output. If Transmission output 1 high limit and low limit are set to the same value, Transmission output 1 will be fixed at 4 mA DC.		
		Resolution	12000
		Current	4 to 20 mA DC(Load resistance: Max. 550 Ω)
		Output accuracy	Within ±0.3% of Transmission output 1 span
Transmission Output 1 Adjustment	Fine adjustment of the Transmission output 1 is performed via Transmission output 1 Zero and Span adjustments.		
Transmission Output 1 Status when Calibrating	Selects Transmission output 1 status when calibrating conductivity.		
		Last value HOLD	Retains the last value before conductivity calibration, and outputs it.
		Set value HOLD	Outputs the value set in [Transmission output 1 value HOLD when calibrating (p.39)].
		Measured value	Outputs the measured value when calibrating conductivity.

<table>
<tr><td>TDS Conversion</td><td colspan="3">TDS stands for Total Dissolved Solids. Conductivity of a solution results from the amount of salt, minerals or dissolved gas. Conductivity is an index indicating total amount of substance in a solution, and TDS indicates only the amount of all dissolved solid substances.

TDS can be used correctly to compare the two solutions in which one ingredient, such as NaCl, is included. However, for comparison between a solution in which one ingredient such as NaCl is included and the other solution in which more than one ingredient is included, TDS error will occur.

TDS and conductivity are expressed with the following formula.
For Conductivity of SI unit (mS/m):
TDS (mg/L) = L (mS/m) × K × 10
For Conductivity of older unit (μS/cm):
TDS (mg/L) = L (μS/cm) × K
K: TDS conversion factor, L: Conductivity</td></tr>
<tr><td>EVT Output</td><td colspan="3"></td></tr>
<tr><td>Output Action</td><td colspan="3">P control action: When setting the proportional band to any value except 0.00 or 0.0.
ON/OFF control action: When setting the proportional band to 0.00 or 0.0.</td></tr>
<tr><td rowspan="11"></td><td rowspan="2">EVT□ proportional band</td><td>Conductivity input</td><td>Measurement range low limit to Measurement range high limit (*1)</td></tr>
<tr><td>Temperature input</td><td>0.0 to 100.0℃ (*2)</td></tr>
<tr><td colspan="2">EVT□ proportional cycle</td><td>1 to 300 seconds</td></tr>
<tr><td rowspan="2">EVT□ ON side, OFF side</td><td>Conductivity input</td><td>0 to 20% of Measurement range high limit (*1)</td></tr>
<tr><td>Temperature input</td><td>0.0 to 10.0℃ (*2)</td></tr>
<tr><td colspan="2">EVT□ output high limit, low limit</td><td>0 to 100%</td></tr>
<tr><td rowspan="2">EVT□ High/Low limits independent upper, lower side value</td><td>Conductivity input</td><td>Measurement range low limit to Measurement range high limit (*1)</td></tr>
<tr><td>Temperature input</td><td>0.0 to 100.0℃ (*2)</td></tr>
<tr><td rowspan="2">EVT□ hysteresis</td><td>Conductivity input</td><td>1 to 20% of Measurement range high limit (*1)</td></tr>
<tr><td>Temperature input</td><td>0.1 to 10.0℃ (*2)</td></tr>
<tr><td colspan="3">(*1) The measurement unit and decimal point place follow the measurement range.
(*2) The decimal point place does not follow the selection. It is fixed.</td></tr>
</table>

	Type	Selectable by the keypad from the following. [See EVT1 action. (Fig.9.2-1) (pp. 48, 49)] • No action • Conductivity input low limit action • Conductivity input high limit action • Temperature input low limit action • Temperature input high limit action • Error output • Fail output • Conductivity input error alarm output • Conductivity input High/Low limits independent action • Temperature input High/Low limits independent action	
	Output	Relay contact 1a	
		Control capacity	3 A 250 V AC (resistive load) 1 A 250 V AC (inductive load cosϕ=0.4)
		Electrical life	100,000 cycles
	EVT□ ON Delay Time	0 to 10000 seconds	
	EVT□ OFF Delay Time	0 to 10000 seconds	
	Output ON Time/ OFF Time when EVT□ Output ON	If ON time and OFF time are set, the output can be turned ON/OFF in a configured cycle when EVT□ output is ON. See “Timing chart (Output ON time and OFF time when EVT1 output is ON)”. (Fig. 9.2-2) (p.50)	
	Conductivity Input Error Alarm	Detects actuator trouble. Even if conductivity input error alarm time has elapsed, and if conductivity input does not become higher than conductivity input error alarm band, the unit assumes that actuator trouble has occurred, and sets Status flag 2 (EVT1, EVT2, EVT3, EVT4 output flag bit). In Serial communication, status can be read by reading Status flag 2 (EVT1, EVT2, EVT3, EVT4 output flag bit). When EEUL□ (Conductivity input error alarm output) is selected in [EVT1 type (p.27)], EVT1 output is turned ON. The same applies to EVT2, EVT3 and EVT4. Conductivity input error alarm is disabled in the following cases. • During conductivity calibration • When Conductivity input error alarm time is set to 0 (zero) seconds or minutes, or Conductivity input error alarm band is set to 0.00.	
	Cycle Automatic Variable Function	If deviation between EVT□ value and measured value enters EVT□ cycle variable range, the proportional cycle will be automatically extended in accordance with the deviation. Proportional action OFF time will be extended, and ON/ OFF ratio will be adjusted. However, if EVT□ cycle extended time is set to 0 (zero) seconds, this function will be disabled.	

Insulation, Dielectric Strength

Circuit Insulation Configuration	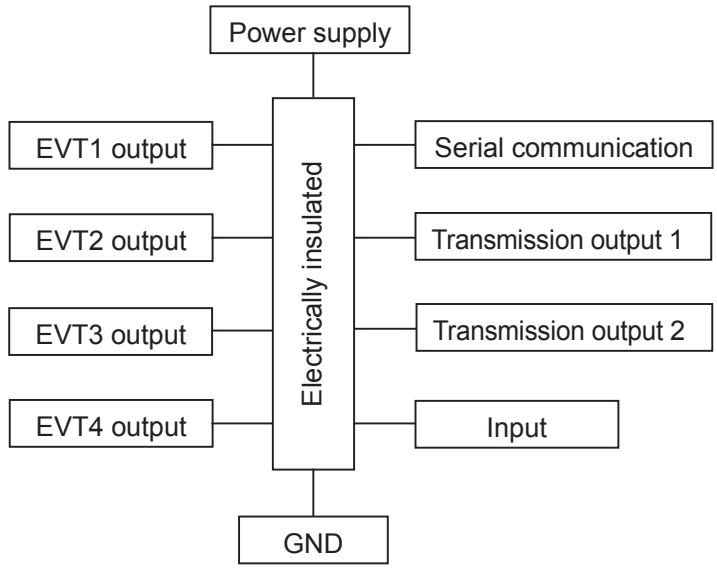 Insulation Resistance:10 MΩ minimum, at 500 V DC
Dielectric Strength	Power terminal - ground (GND): 1.5 kV AC for 1 minute Input terminal - ground (GND): 1.5 kV AC for 1 minute Input terminal - power terminal: 1.5 kV AC for 1 minute

Attached Functions

Set Value Lock	Lock 1: None of the set values can be changed. Lock 2: Only EVT1, EVT2, EVT3, EVT4 values can be changed. Lock 3: All set values – except Sensor cell constant, Measurement unit, Measurement range, Conductivity Zero and Span adjustment values, Temperature calibration value, Transmission output 1 Zero and Span adjustment values, Transmission output 2 Zero and Span adjustment values – can be temporarily changed. However, they revert to their previous value after the power is turned off because they are not saved in the non-volatile IC memory.
Conductivity Input Sensor Correction	This corrects the input value from the conductivity sensor. When conductivity measured by the sensor may deviate from the conductivity in the measured location, the desired conductivity can be obtained by adding a sensor correction value. However, it is only effective within the measurement range regardless of the sensor correction value.
Temperature Display when No Temperature Compensation	If oFF□□ (No temperature compensation) is selected in [Temperature compensation method (p.25)], the item to be indicated on the Temperature Display can be selected.
Cable Length Correction	If 2WI RE (2-wire type) is selected in [Pt100 input wire type (p.26)], and if sensor cable is too long, temperature measurement error will occur due to cable resistance. This can be corrected by setting the cable length correction value and cable cross-section area.

<table>
<tr><td>Outside Measurement Range</td><td>When Conductivity measured value, Salinity conversion or TDS conversion factor is outside the measurement range, the following will be indicated.
<table>
<tr><th>Conductivity Display</th><th>Temperature Display</th></tr>
<tr><td>Conductivity, Salinity conversion high limit or TDS conversion high limit is flashing.</td><td>Temperature measurement value</td></tr>
</table>
When temperature measurement value is outside the measurement range, the following will be indicated.
<table>
<tr><th>Conductivity Display</th><th>Temperature Display</th></tr>
<tr><td>Measured conductivity</td><td>Exceeding 110.0℃: ERR03</td></tr>
<tr><td>Measured conductivity</td><td>Less than 0.0℃: ERR04</td></tr>
</table></td></tr>
<tr><td>Power Failure Countermeasure</td><td>The setting data is backed up in the non-volatile IC memory.</td></tr>
<tr><td>Self-diagnosis</td><td>The CPU is monitored by a watchdog timer, and if an abnormal status occurs, the AER-102-ECH is switched to warm-up status.</td></tr>
<tr><td>Bar Graph Indication</td><td>When rAoT 1 (Transmission output 1) or rAoT2 (Transmission output 2) is selected in [Bar graph indication (p.41)], segments light in accordance with the output.
Scale is -5 to 105%. Segments will light from left to right in accordance with the output.
(e.g.) When output is 50%

-5% 50% 105%
Lights from left to right in accordance with the output.</td></tr>
<tr><td>Warm-up Indication</td><td>For approx. 4 seconds after the power is switched ON, the characters below are indicated on the Conductivity Display and Temperature Display.
<table>
<tr><th>Display</th><th>Character</th><th colspan="2">Measurement Unit</th></tr>
<tr><td rowspan="5">Conductivity Display</td><td>coNd</td><td colspan="2">Conductivity (mS/cm, μS/cm)</td></tr>
<tr><td>Hi</td><td colspan="2">Conductivity (S/m, mS/m)</td></tr>
<tr><td>SEA</td><td colspan="2">Seawater salinity (%)</td></tr>
<tr><td>SALT</td><td colspan="2">NaCl salinity (%)</td></tr>
<tr><td>tds</td><td colspan="2">TDS conversion (g/L, mg/L)</td></tr>
<tr><th>Display</th><th>Character</th><th>Input tem-perature spec. (*)</th><th>Selection Item in [Pt100 input wire type] (p.26)</th></tr>
<tr><td rowspan="3">Temperature Display</td><td>Pt 2</td><td rowspan="2">Pt100</td><td>2wi RE: 2-wire type</td></tr>
<tr><td>Pt 3</td><td>3wi RE: 3-wire type</td></tr>
<tr><td>Pt 10</td><td>Pt1000</td><td></td></tr>
</table>
(*) This input temperature specification was specified at the time of ordering.</td></tr>
</table>

Conductivity Color Selection	Selects the Conductivity Display color.	
	Selection Item in [Conductivity Color (p.40)]	**Conductivity Display Color**
	GRN□□	Green
	RED□□	Red
	ORG□□	Orange
	EcGR□	Conductivity color changes continuously.
	Conductivity color changes continuously: Conductivity Display color changes according to [Conductivity color reference value (p.40)] and [Conductivity color range (p.40)] settings. • When Conductivity is lower than [Conductivity color reference value] – [Conductivity color range]: Orange • When Conductivity is within [Conductivity color reference value] ± [Conductivity color range]: Green • When Conductivity is higher than [Conductivity color reference value] + [Conductivity color range]: Red 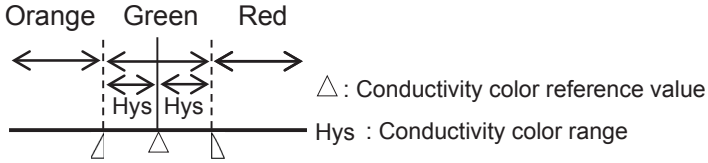	

Error Code

Error Code — Error codes below flash on the Temperature Display.

Error Code	Error Type	Error Contents	Description	Occurrence
ERR01	Fail	Temperature sensor burnout	Temperature sensor lead wire is burnt out.	When Measuring and calibrating
ERR02	Fail	Temperature sensor short-circuited	Temperature sensor lead wire is short-circuited.	
ERR03	Error	Outside temperature compensation range	Measured temperature has exceeded 110.0℃.	
ERR04	Error	Outside temperature compensation range	Measured temperature is less than 0.0℃.	

Other

Power Consumption	Approx. 13 VA
Ambient Temperature	0 to 50℃
Ambient Humidity	35 to 85 %RH (Non-condensing)
Weight	Approx. 280 g
Accessories Included	Unit label: 1 sheet Mounting brackets: 1 set Instruction manual: 1 copy Inspection report: 1 sheet When Serial communication (C5 option) is ordered: Wire harness C5J (0.2 m): 1 length Wire harness C0J (3 m): 1 length When EVT3, EVT4 outputs (Contact output 3, 4) (EVT3 option) are/is ordered: Wire harness HBJ (3 m): 2 lengths
Accessories Sold Separately	Terminal cover

10.2 Optional Specifications

Serial Communication (Option code: C5)

Serial Communication		The following operations can be carried out from an external computer. (1) Reading and setting of various set values (2) Reading of the conductivity, salinity conversion, temperature and status (3) Function change, adjustment (4) Reading and setting of user save area
	Cable Length	1.2 km (Max.), Cable resistance: Within 50 Ω (Terminators are not necessary, but if used, use 120 Ω minimum on one side.)
	Communication Line	EIA RS-485
	Communication Method	Half-duplex communication
	Communication Speed	9600, 19200, 38400 bps (Selectable by keypad)
	Synchronization Method	Start-stop synchronization
	Code Form	ASCII, Binary
	Communication Protocol	Shinko protocol, MODBUS ASCII, MODBUS RTU (Selectable by keypad)
	Data Bit/Parity	8 bits/No parity, 7 bits/No parity, 8 bits/Even, 7 bits/Even, 8 bits/Odd, 7 bits/Odd (Selectable by keypad)
	Stop Bit	1 bit, 2 bits (Selectable by keypad)
	Error Correction	Command request repeat system
	Error Detection	Parity check, Checksum (Shinko protocol), LRC (MODBUS protocol ASCII), CRC-16 (MODBUS protocol RTU)

	Data Format	Communication Protocol	**Shinko Protocol**	**MODBUS ASCII**	**MODBUS RTU**
		Start bit	1	1	1
		Data bit	7	7 (8) Selectable	8
		Parity	Even	Even (No parity, Odd) Selectable	No parity (Even, Odd) Selectable
		Stop bit	1	1 (2) Selectable	1 (2) Selectable

EVT3, EVT4 Outputs (Contact output 3, 4) (Option code: EVT3)

EVT3, EVT4 Outputs (Contact output 3, 4)	Same as the EVT output (pp. 59, 60)

Transmission Output 2 (Option Code: TA2)

Transmission Output 2	Converting conductivity, temperature or MV to analog signal every input sampling period, and outputs the value in current. If oFF (No temperature compensation) is selected in [Temperature compensation method (p.25)], and if TEMP (Temperature transmission) is selected in [Transmission output 2 type (p.38)], Transmission output 2 value will differ depending on the selection in [Temperature Display when no temperature compensation (p.41)] as follows. • If oFF (Unlit) or Std (Reference temperature) is selected, the value set in [Reference temperature (p.25)] will be output. • If Pv (Measured value) is selected, the measured value will be output. If Transmission output 2 high limit and low limit are set to the same value, Transmission output 2 will be fixed at 4 mA DC.	
	Resolution	12000
	Current	4 to 20 mA DC (Load resistance: Max 550 Ω)
	Output accuracy	Within ±0.3% of Transmission output 2 Span
Transmission Output 2 Adjustment	Fine adjustment of Transmission output 2 can be performed via Transmission output 2 Zero adjustment and Span adjustment.	
Transmission Output 2 Status when Calibrating	Transmission output 2 status can be selected when calibrating conductivity. Last value HOLD: Retains the last value before conductivity calibration, and outputs it. Set value HOLD: Outputs the value set in [Transmission output 2 value HOLD when calibrating].(p.39) Measured value: Outputs the measured value when calibrating conductivity.	

11. Troubleshooting

If any malfunction occurs, refer to the following items after checking that power is being supplied to the AER-102-ECH.

11.1 Indication

Problem	Possible Cause	Solution
The Conductivity/ Temperature Displays are unlit.	The time set in [Backlight time (p.41)] has passed.	If any key is pressed while displays are unlit, it will re-light. Set the backlight time to a suitable time-frame.
Indication of the Conductivity Display or Temperature Display is unstable or irregular.	Conductivity calibration and temperature calibration may not have finished.	Perform conductivity calibration and temperature calibration.
	Temperature compensation method might not be selected correctly.	Select a correct Temperature compensation method.
	Specification of the conductivity sensor may not be suitable.	Replace the sensor with a suitable one.
	There may be equipment that interferes with or makes noise near the AER-102-ECH.	Keep AER-102-ECH clear of any potentially disruptive equipment.
The Temperature Display is unlit.	oFF□ (Unlit) is selected in [Temperature Display when no temperature compensation (p.41)].	Select Std□ (Reference temperature) or PV□□ (Measured value).
[ERR0 1] is flashing on the Temperature Display.	The temperature sensor lead wire is burnt out.	Replace with a new conductivity sensor.
[ERR02] is flashing on the Temperature Display.	The temperature sensor lead wire is short-circuited.	Replace with a new conductivity sensor.
[ERR03] is flashing on the Temperature Display.	The measured temperature value has exceeded 110.0℃.	Check the measuring environment.
[ERR04] is flashing on the Temperature Display.	The measured temperature value is less than 0.0℃.	Check the measuring environment.
[ERR 1□] is indicating on the Conductivity Display.	Internal memory is defective.	Contact our agency or us.

11.2 Key Operation

Problem	Possible Cause	Solution
Unable to set values.	Lock 1 (Lock 1) or Lock2 (Lock 2) is selected in [Set value lock (p.36)]. (The LOCK indicator is lit when Lock 1 or Lock 2 is selected.)	Select -------- (Unlock).
The values do not change by the △ or ▽ key.		

12. Temperature Compensation Method

12.1 Temperature Compensation Based on the Temperature Characteristics of NaCl

When the main ingredient of the salt contained in a sample is NaCl, use temperature compensation method based on the temperature characteristics of NaCl.

Conductivity of NaCl solution varies with the ratio based on the conductivity at 25℃ as shown below.

The conductivity at 25℃ is calculated on the basis of the conductivity ratio at each temperature in (Table 12.1-1).

(Table 12.1-1)

Temperature (℃)	Conductivity ratio of NaCl	Coefficient
0	0.542	1.845
5	0.626	1.596
10	0.715	1.399
15	0.806	1.240
20	0.902	1.109
25	1.000	1.000
30	1.101	0.908
35	1.205	0.830
40	1.312	0.762
45	1.420	0.704
50	1.531	0.653
55	1.643	0.609
60	1.757	0.569
65	1.872	0.534
70	1.987	0.503
75	2.103	0.476
80	2.219	0.451
85	2.335	0.428
90	2.450	0.408
95	2.564	0.390
100	2.677	0.374

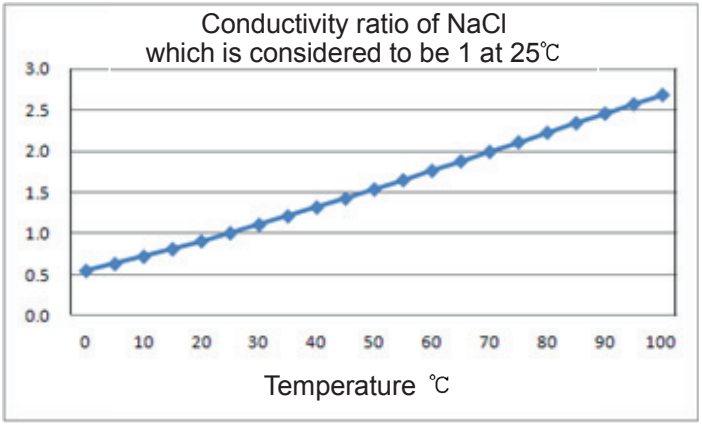

(Fig.12.1-1)

12.2 How to Input Temperature Coefficient

Temperature compensation is conducted using temperature coefficient (%/℃) and a randomly selected reference temperature.
Conductivity of the solution varies depending on the temperature.
If temperature rises by 1℃, the conductivity rises by 2% at 25℃ basis in general.
Temperature coefficient differs depending on the solution type and its concentration, which ranges from 0.50 to 2.50.
By inputting the temperature coefficient, temperature compensation can be calculated to find the conductivity at 25℃.
Temperature coefficient 2.00 %/℃ can be used for most of solutions.
If temperature coefficient of solution is already-known, enter the value. (Table 12.2-1)

If the conductivity at an arbitrary temperature T℃ is already-known, and if reference temperature is ST℃, conductivity $C_{(ST)}$ at the reference temperature can be obtained according to the following formula.

$$C_{(ST)} = \frac{C_{(T)}}{\left(1 + 0.01 \times \alpha \times (T - ST)\right)}$$

$C_{(ST)}$: Conductivity of the solution at ST℃
$C_{(T)}$: Conductivity of the solution at T℃
α : Temperature coefficient of conductivity (%)
T: Arbitrary temperature T℃
ST: Reference temperature ST℃

(Table 12.2-1)

Sub-stance	Tempe-rature (℃)	Concen-tration Wt%	Conduc-tivity S/m	Temperature coefficient (%/℃)	Sub-stance	Tempe-rature (℃)	Concen-tration Wt%	Conduc-tivity S/m	Temperature coefficient (%/℃)
NaOH	15	5	19.69	2.01	NaCl	18	5	6.72	2.17
		10	31.24	2.17			10	12.11	2.14
		15	34.63	2.49			15	16.42	2.12
		20	32.70	2.99			20	19.57	2.16
		30	20.22	4.50			25	21.35	2.27
		40	11.64	6.48	Na_2SO_4	18	5	4.09	2.36
KOH	15	25.2	54.03	2.09			10	6.87	2.49
		29.4	54.34	2.21			15	8.86	2.56
		33.6	52.21	2.36	Na_2CO_3	18	5	4.56	2.52
		42	42.12	2.83			10	7.05	2.71
NH_3	15	0.1	0.0251	2.46			15	8.36	2.94
		1.6	0.0867	2.38	KCl	18	5	6.90	2.01
		4.01	0.1095	2.50			10	13.59	1.88
		8.03	0.1038	2.62			15	20.20	1.79
		16.15	0.0632	3.01			20	26.77	1.68
HF	18	1.5	1.98	0.72			21	28.10	1.68
		4.8	5.93	0.66	KBr	15	5	4.65	2.06
		24.5	28.32	0.58			10	9.28	1.94
HCl	18	5	39.48	1.58			20	19.07	1.77
		10	63.02	1.56	KCN	15	3.25	5.07	2.07
		20	76.15	1.54			6.5	10.26	1.98
		30	66.20	1.52			-	-	-

Sub-stance	Tempe-rature (℃)	Concen-tration Wt%	Conduc-tivity S/m	Temperature coefficient (%/℃)	Sub-stance	Tempe-rature (℃)	Concen-tration Wt%	Conduc-tivity S/m	Temperature coefficient (%/℃)
H_2SO_4	18	5	20.85	1.21	NH_4Cl	18	5	9.18	1.98
		10	39.15	1.28			10	17.76	1.86
		20	65.27	1.45			15	25.86	1.71
		40	68.00	1.78			20	33.65	1.61
		50	54.05	1.93			25	40.25	1.54
		60	37.26	2.13	NH_4NO_3	15	5	5.90	2.03
		80	11.05	3.49			10	11.17	1.94
		100.14	1.87	0.30			30	28.41	1.68
		-	-	-			50	36.22	1.56
HNO_3	18	6.2	31.23		$CuSO_4$	18	2.5	10.90	2.13
		12.4	54.18				5	18.90	2.16
		31	78.19				10	32.00	2.18
		49.6	63.41				15	42.10	2.31
		62	49.64		CH_3COOH	18	10	15.26	1.69
H_3PO_4	15	10	5.66				15	16.19	1.74
		20	11.29				20	16.05	1.79
		40	20.70				30	14.01	1.86
		45	20.87				40	10.81	1.96
		50	20.73				60	4.56	2.06

13. Character Tables

The following shows our character tables. Use data column for your reference.

13.1 Setting Group List

Character	Setting Group	Reference Section
F.Nc.1	Conductivity Input Group	Section 13.7 (pp.73, 74)
F.Nc.2	Temperature Input Group	Section 13.8 (pp.75)
EVT.a.1	EVT1 Action Group	Section 13.9 (pp.76, 77)
EVT.a.2	EVT2 Action Group	Section 13.10 (pp.78, 79)
EVT.a.3	EVT3 Action Group	Section 13.11 (pp.80, 81)
EVT.a.4	EVT4 Action Group	Section 13.12 (pp.82, 83)
a.T.E.R	Basic Function Group	Section 13.13 (pp.84 to 86)

13.2 Temperature Calibration Mode

Character	Setting Item, Setting Range	Factory Default	Data
to (*) 00.0	**Temperature calibration value** -10.0 to 10.0℃	0.0℃	

(*) to and temperature are displayed alternately.

13.3 Conductivity Calibration Mode

Character	Setting Item, Setting Range	Factory Default	Data
AdJZ (*) 0.00	**Conductivity Zero adjustment value** See (Tables 13.3-1, 13.3-2) (p.71)	0.00	
AdJS (*) 1.000	**Conductivity Span adjustment value** 0.700 to 1.300	1.000	

(*) AdJZ and conductivity are displayed alternately.
AdJS and conductivity are displayed alternately.

(Table 13.3-1)

Measurement Range		Conductivity Zero Adjustment Value Setting Range
Cell constant 1.0/cm	0.00 to 20.00 mS/cm	-2.00 to 2.00
	0.0 to 200.0 mS/cm	-20.0 to 20.0
	0.0 to 500.0 mS/cm	-50.0 to 50.0
	0 to 500 mS/cm	-50 to 50
	0.000 to 2.000 mS/cm	-0.200 to 0.200
	0.000 to 5.000 mS/cm	-0.500 to 0.500
	0.00 to 50.00 mS/cm	-5.00 to 5.00
	0 to 2000 μS/cm	-200 to 200
	0 to 5000 μS/cm	-500 to 500
	0.000 to 2.000 S/m	-0.200 to 0.200
	0.00 to 20.00 S/m	-2.00 to 2.00
	0.00 to 50.0 S/m	-5.00 to 5.00
	0.0 to 50.0 S/m	-5.0 to 5.0
	0 to 2000 mS/m	-200 to 200
	0.000 to 5.000 S/m	-0.500 to 0.500
	0.0 to 200.0 mS/m	-20.0 to 20.0
	0.0 to 500.0 mS/m	-50.0 to 50.0
	0.0 to 20.0 g/L	-2.0 to 2.0
	0 to 200 g/L	-20 to 20
	0 to 500 g/L	-50 to 50
	0 to 2000 mg/L	-200 to 200
	0 to 5000 mg/L	-500 to 500

(Table 13.3-2)

Measurement Range		Conductivity Zero Adjustment Value Setting Range
Cell constant 10.0/cm	0.0 to 200.0 mS/cm	-20.0 to 20.0
	0.0 to 500.0 mS/cm	-50.0 to 50.0
	0 to 2000 mS/cm	-200 to 200
	0.00 to 20.00 S/m	-2.00 to 2.00
	0.00 to 50.00 S/m	-5.00 to 5.00
	0.0 to 200.0 S/m	-20.0 to 20.0
	0 to 200 g/L	-20 to 20
	0 to 500 g/L	-50 to 50
	0 to 2000 g/L	-200 to 200
Seawater salinity 0.00 to 4.00%		-0.40 to 0.40
NaCl salinity 0.00 to 20.00%		-2.00 to 2.00

13.4 Transmission Output 1 Adjustment Mode

Character	Setting Item, Setting Range	Factory Default	Data
AJZ 1 0.00	**Transmission output 1 Zero adjustment value** ±5.00% of Transmission output 1 span	0.00%	
AJS 1 0.00	**Transmission output 1 Span adjustment value** ±5.00% of Transmission output 1 span	0.00%	

13.5 Transmission Output 2 Adjustment Mode

Character	Setting Item, Setting Range	Factory Default	Data
AJZ2 0.00	**Transmission output 2 Zero adjustment value** ±5.00% of Transmission output 2 span	0.00%	
AJS2 0.00	**Transmission output 2 Span adjustment value** ±5.00% of Transmission output 2 span	0.00%	

13.6 Simple Setting Mode

Character	Setting Item, Setting Range	Factory Default	Data
EVT 1 0.00	**EVT1 value** Conductivity input: Measurement range low limit to Measurement range high limit Temperature input: 0.0 to 100.0℃	Conductivity input: Measurement range low limit Temperature input: 0.0℃	
EVT2 0.00	**EVT2 value** Conductivity input: Measurement range low limit to Measurement range high limit Temperature input: 0.0 to 100.0℃	Conductivity input: Measurement range low limit Temperature input: 0.0℃	
EVT3 0.00	**EVT3 value** Conductivity input: Measurement range low limit to Measurement range high limit Temperature input: 0.0 to 100.0℃	Conductivity input: Measurement range low limit Temperature input: 0.0℃	
EVT4 0.00	**EVT4 value** Conductivity input: Measurement range low limit to Measurement range high limit Temperature input: 0.0 to 100.0℃	Conductivity input: Measurement range low limit Temperature input: 0.0℃	

13.7 Conductivity Input Group

Character	Setting Item, Setting Range	Factory Default	Data
cELL □□□ 1.0	**Sensor cell constant** □□□ 1.0: 1.0/cm □□ 10.0: 10.0/cm	1.0/cm	
coEF □ 1.000	**Cell constant correction value** Setting range: 0.001 to 5.000	1.000	
UNIT conC	**Measurement unit** conC□ : Conductivity (mS/cm, μS/cm) SI □□□ : Conductivity (S/m, mS/m) SEA□□ : Seawater salinity conversion (%) SALT□ : NaCl salinity conversion (%) Tds□□ : TDS conversion (g/L, mg/L)	Conductivity (mS/cm, μS/cm)	
MRNG □20.00	**Measurement range** See (Table 13.7-1, 13.7-2) (p.74)	20.00 mS/cm	
TdsK □□0.50	**TDS conversion factor** Setting range: 0.30 to 1.00	0.50	
FILT □□□0.0	**Conductivity input filter time constant** Setting range: 0.0 to 10.0 seconds	0.0 seconds	
Sno□ □□0.00	**Conductivity input sensor correction** Setting range: ±10% of measurement span	0.00 mS/cm	
SERR □□□□0	**3-electrode Conductivity Sensor resistance** Setting range: 0 to 100 Ω	0 Ω	
dFcT □□□20	**Conductivity inputs for moving average** Setting range: 1 to 120	20	

(Table 13.7-1) When sensor cell constant 1.0/cm is selected:

Measurement Unit	Selection Item	Measurement Range
Conductivity (mS/cm, μS/cm)	20.00	0.00 to 20.00 mS/cm
	200.0	0.0 to 200.0 mS/cm
	500.0	0.0 to 500.0 mS/cm
	500	0 to 500 mS/cm
	2.000	0.000 to 2.000 mS/cm
	5.000	0.000 to 5.000 mS/cm
	50.00	0.00 to 50.00 mS/cm
	2000	0 to 2000 μS/cm
	5000	0 to 5000 μS/cm
Conductivity (S/m, mS/m)	2.000	0.000 to 2.000 S/m
	20.00	0.00 to 20.00 S/m
	50.00	0.00 to 50.00 S/m
	50.0	0.0 to 50.0 S/m
	5.000	0.000 to 5.000 S/m
	200.0	0.0 to 200.0 mS/m
	500.0	0.0 to 500.0 mS/m
TDS conversion (g/L, mg/L)	20.0	0.0 to 20.0 g/L
	200	0 to 200 g/L
	500	0 to 500 g/L
	2000	0 to 2000 mg/L
	5000	0 to 5000 mg/L
Seawater salinity (%)	4.00	0.00 to 4.00%
NaCl salinity (%)	20.00	0.00 to 20.00%

(**Table 13.7-2) When sensor cell constant 10.0/cm is selected:**

Measurement Unit	Selection Item	Measurement Range
Conductivity (mS/cm, μS/cm)	200.0	0.0 to 200.0 mS/cm
	500.0	0.0 to 500.0 mS/cm
	2000	0 to 2000 mS/cm
Conductivity (S/m, mS/m)	20.00	0.00 to 20.00 S/m
	50.00	0.00 to 50.00 S/m
	200.0	0.0 to 200.0 S/m
TDS conversion (g/L, mg/L)	200	0 to 200 g/L
	500	0 to 500 g/L
	2000	0 to 2000 g/L
Seawater salinity (%)	4.00	0.00 to 4.00%
NaCl salinity (%)	20.00	0.00 to 20.00%

13.8 Temperature Input Group

Character	Setting Item, Setting Range	Factory Default	Data
TcM□ NAcL□	**Temperature compensation method** NAcL□: Temperature compensation is conducted using temperature characteristics of NaCl. Select when the main ingredient of salt included in a sample is NaCl. TcoE□: Temperature compensation is conducted using temperature coefficient (%/℃) and randomly selected reference temperature. oFF□□: No temperature compensation	NaCl	
KcoE□ □□2.00	**Temperature coefficient** Setting range: -5.00 to 5.00 %/℃	2.00 %/℃	
rTNd□ □□25.0	**Reference temperature** Setting range: 5.0 to 95.0℃	25.0℃	
dP2□□ □□□0.0	**Decimal point place** □□□□0 : No decimal point □□□0.0 : 1 digit after decimal point	1 digit after decimal point	
cNEcT 3WI RE	**Pt100 input wire type** 2WI RE : 2-wire type 3WI RE : 3-wire type	3-wire type	
cAbLE □□□0.0	**Cable length correction** Setting range: 0.0 to 100.0 m	0.0 m	
c4Ec□ □□0.30	**Cable cross-section** Setting range: 0.10 to 2.00 mm^2	0.30 mm^2	
FIT2□ □□□0.0	**Temperature input filter time constant** Setting range: 0.0 to 10.0 seconds	0.0 seconds	
dFcT□ □□□20	**Temperature inputs for moving average** Setting range: 1 to 120	20	

13.9 EVT1 Action Group

Character	Setting Item, Setting Range	Factory Default	Data
EVT 1F -----	**EVT1 type** -----: No action Ec_L□: Conductivity input low limit action Ec_H□: Conductivity input high limit action TEMPL: Temperature input low limit action TEMPH: Temperature input high limit action ERoUT: Error output FAIL□: Fail output EEUL□: Conductivity input error alarm output Ec_HL: Conductivity input High/Low limits independent action TEMHL: Temperature input High/Low limits independent action	No action	
EVV 1□ □□0.00	**EVT1 value** Conductivity input: Measurement range low limit to Measurement range high limit Temperature input: 0.0 to 100.0℃	Conductivity input: Measurement range low limit Temperature input: 0.0℃	
EP 1□□ □□0.00	**EVT1 proportional band** Conductivity input: Measurement range low limit to Measurement range high limit Temperature input : 0.0 to 100.0℃	Conductivity input: Measurement range low limit Temperature input: 0.0℃	
E 1RST □□0.00	**EVT1 reset** Conductivity input: ±10% of Measurement span Temperature input: ±10.0℃	Conductivity input: 0.00 mS/cm Temperature input: 0.0℃	
E 1dl F Hdl F□	**EVT1 hysteresis type** cdl F□: Medium Value Hdl F□: Reference Value	Reference Value	
E 1dFo □□0.01	**EVT1 ON side** Conductivity input: 0.00 to 20% of Measurement range high limit Temperature input: 0.0 to 10.0℃	Conductivity input: 0.01 mS/cm Temperature input: 1.0℃	
E 1dFU □□0.01	**EVT1 OFF side** Conductivity input: 0.00 to 20% of Measurement range high limit Temperature input: 0.0 to 10.0℃	Conductivity input: 0.01 mS/cm Temperature input: 1.0℃	
E 1oNT □□□□0	**EVT1 ON delay time** Setting range: 0 to 10000 seconds	0 seconds	
E 1oFT □□□□0	**EVT1 OFF delay time** Setting range: 0 to 10000 seconds	0 seconds	
E 1c□□ □□□30	**EVT1 proportional cycle** Setting range: 1 to 300 seconds	30 seconds	
E 1oLH □□ 100	**EVT1 output high limit** Setting range: EVT1 output low limit to 100%	100%	

Character	Setting Item, Setting Range	Factory Default	Data
E 1oLL □□□□0	**EVT1 output low limit** Setting range: 0% to EVT1 output high limit	0%	
ooNT 1 □□□□0	**Output ON time when EVT1 output ON** Setting range: 0 to 10000 seconds	0 seconds	
ooFT 1 □□□□0	**Output OFF time when EVT1 output ON** Setting range: 0 to 10000 seconds	0 seconds	
E 1c4□ ------	**EVT1 conductivity input error alarm EVT□ type** ------ : No action EVT2□ : EVT2 type EVT3□ : EVT3 type EVT4□ : EVT4 type	No action	
E 1Eo□ □□0.00	**EVT1 conductivity input error alarm band when EVT□ output ON** Measurement range low limit to Measurement range high limit	Measurement range low limit	
E 1Eot □□□□0	**EVT1 conductivity input error alarm time when EVT□ output ON** Setting range: 0 to 10000 seconds or minutes	0 seconds	
E 1Ec□ □□0.00	**EVT1 conductivity input error alarm band when EVT□ output OFF** Measurement range low limit to Measurement range high limit	Measurement range low limit	
E 1Ect □□□□0	**EVT1 conductivity input error alarm time when EVT□ output OFF** Setting range: 0 to 10000 seconds or minutes	0 seconds	
MVZN 1 □□50.0	**EVT1 cycle variable range** Setting range: 1.0 to 100.0%	50.0%	
cENT 1 □□□□0	**EVT1 cycle extended time** Setting range: 0 to 300 seconds	0 seconds	
E 1_L□ □□0.00	**EVT1 High/Low limits independent lower side value** Conductivity input: Measurement range low limit to Measurement range high limit Temperature input: 0.0 to 100.0℃	Conductivity input: Measurement range low limit Temperature input: 0.0℃	
E 1_H□ □□0.00	**EVT1 High/Low limits independent upper side value** Conductivity input: Measurement range low limit to Measurement range high limit Temperature input: 0.0 to 100.0℃	Conductivity input: Measurement range low limit Temperature input: 0.0℃	
E 1_HY □□0.01	**EVT1 hysteresis** Conductivity input: 0.01 to 20% of Measurement range high limit Temperature input: 0.1 to 10.0℃	Conductivity input: 0.01 mS/cm Temperature input: 1.0℃	

13.10 EVT2 Action Group

Character	Setting Item, Setting Range	Factory Default	Data
EVT2F ------	**EVT2 type** ------: No action Ec_L□: Conductivity input low limit action Ec_H□: Conductivity input high limit action TEMPL: Temperature input low limit action TEMPH: Temperature input high limit action ERoUT: Error output FAIL□: Fail output EEUL□: Conductivity input error alarm output Ec_HL: Conductivity input High/Low limits independent action TEMHL: Temperature input High/Low limits independent action	No action	
EVV2□ □□0.00	**EVT2 value** Conductivity input: Measurement range low limit to Measurement range high limit Temperature input: 0.0 to 100.0℃	Conductivity input: Measurement range low limit Temperature input: 0.0℃	
EP2□□ □□0.00	**EVT2 proportional band** Conductivity input: Measurement range low limit to Measurement range high limit Temperature input : 0.0 to 100.0℃	Conductivity input: Measurement range low limit Temperature input: 0.0℃	
E2RSF □□0.00	**EVT2 reset** Conductivity input: ±10% of Measurement span Temperature input: ±10.0℃	Conductivity input: 0.00 mS/cm Temperature input: 0.0℃	
E2dIF SdIF□	**EVT2 hysteresis type** cdIF□: Medium Value SdIF□: Reference Value	Reference Value	
E2dFo □□0.01	**EVT2 ON side** Conductivity input: 0.00 to 20% of Measurement range high limit Temperature input: 0.0 to 10.0℃	Conductivity input: 0.01 mS/cm Temperature input: 1.0℃	
E2dFU □□0.01	**EVT2 OFF side** Conductivity input: 0.00 to 20% of Measurement range high limit Temperature input: 0.0 to 10.0℃	Conductivity input: 0.01 mS/cm Temperature input: 1.0℃	
E2oNT □□□0	**EVT2 ON delay time** Setting range: 0 to 10000 seconds	0 seconds	
E2oFT □□□0	**EVT2 OFF delay time** Setting range: 0 to 10000 seconds	0 seconds	
E2c□□ □□30	**EVT2 proportional cycle** Setting range: 1 to 300 seconds	30 seconds	
E2oLH □□100	**EVT2 output high limit** Setting range: EVT2 output low limit to 100%	100%	

Character	Setting Item, Setting Range	Factory Default	Data
E2oLL □□□□0	**EVT2 output low limit** Setting range: 0% to EVT2 output high limit	0%	
ooNT2 □□□□0	**Output ON time when EVT2 output ON** Setting range: 0 to 10000 seconds	0 seconds	
ooFT2 □□□□0	**Output OFF time when EVT2 output ON** Setting range: 0 to 10000 seconds	0 seconds	
E2c4□ --------	**EVT2 conductivity input error alarm EVT□ type** EVT 1□ : EVT1 type -------- : No action EVT3□ : EVT3 type EVT4□ : EVT4 type	No action	
E2Eo□ □□0.00	**EVT2 conductivity input error alarm band when EVT□ output ON** Measurement range low limit to Measurement range high limit	Measurement range low limit	
E2EoT □□□□0	**EVT2 conductivity input error alarm time when EVT□ output ON** Setting range: 0 to 10000 seconds or minutes	0 seconds	
E2Ec□ □□0.00	**EVT2 conductivity input error alarm band when EVT□ output OFF** Measurement range low limit to Measurement range high limit	Measurement range low limit	
E2EcT □□□□0	**EVT2 conductivity input error alarm time when EVT□ output OFF** Setting range: 0 to 10000 seconds or minutes	0 seconds	
MVZN2 □□50.0	**EVT2 cycle variable range** Setting range: 1.0 to 100.0%	50.0%	
cENT2 □□□□0	**EVT2 cycle extended time** Setting range: 0 to 300 seconds	0 seconds	
E2_L□ □□0.00	**EVT2 High/Low limits independent lower side value** Conductivity input: Measurement range low limit to Measurement range high limit Temperature input: 0.0 to 100.0℃	Conductivity input: Measurement range low limit Temperature input: 0.0℃	
E2_H□ □□0.00	**EVT2 High/Low limits independent upper side value** Conductivity input: Measurement range low limit to Measurement range high limit Temperature input: 0.0 to 100.0℃	Conductivity input: Measurement range low limit Temperature input: 0.0℃	
E2_HY □□0.01	**EVT2 hysteresis** Conductivity input: 0.01 to 20% of Measurement range high limit Temperature input: 0.1 to 10.0℃	Conductivity input: 0.01 mS/cm Temperature input: 1.0℃	

13.11 EVT3 Action Group

Character	Setting Item, Setting Range	Factory Default	Data
EVT3F -----	**EVT3 type** -----: No action Ec_L□: Conductivity input low limit action Ec_H□: Conductivity input high limit action TEMPL: Temperature input low limit action TEMPH: Temperature input high limit action ERoUT: Error output FAIL□: Fail output EEUL□: Conductivity input error alarm output Ec_HL: Conductivity input High/Low limits independent action TEMHL: Temperature input High/Low limits independent action	No action	
EV3□ □□0.00	**EVT3 value** Conductivity input: Measurement range low limit to Measurement range high limit Temperature input: 0.0 to 100.0℃	Conductivity input: Measurement range low limit Temperature input: 0.0℃	
EP3□□ □□0.00	**EVT3 proportional band** Conductivity input: Measurement range low limit to Measurement range high limit Temperature input : 0.0 to 100.0℃	Conductivity input: Measurement range low limit Temperature input: 0.0℃	
E3RST □□0.00	**EVT3 reset** Conductivity input: ±10% of Measurement span Temperature input: ±10.0℃	Conductivity input: 0.00 mS/cm Temperature input: 0.0℃	
E3dIF HdIF□	**EVT3 hysteresis type** cdIF□: Medium Value HdIF□: Reference Value	Reference Value	
E3dFo □□0.01	**EVT3 ON side** Conductivity input: 0.00 to 20% of Measurement range high limit Temperature input: 0.0 to 10.0℃	Conductivity input: 0.01 mS/cm Temperature input: 1.0℃	
E3dFU □□0.01	**EVT3 OFF side** Conductivity input: 0.00 to 20% of Measurement range high limit Temperature input: 0.0 to 10.0℃	Conductivity input: 0.01 mS/cm Temperature input: 1.0℃	
E3oNT □□□□0	**EVT3 ON delay time** Setting range: 0 to 10000 seconds	0 seconds	
E3oFT □□□□0	**EVT3 OFF delay time** Setting range: 0 to 10000 seconds	0 seconds	
E3c□□ □□□30	**EVT3 proportional cycle** Setting range: 1 to 300 seconds	30 seconds	
E3oLH □□100	**EVT3 output high limit** Setting range: EVT3 output low limit to 100%	100%	

Character	Setting Item, Setting Range	Factory Default	Data
E3oLL □□□□0	**EVT3 output low limit** Setting range: 0% to EVT3 output high limit	0%	
ooNT3 □□□□0	**Output ON time when EVT3 output ON** Setting range: 0 to 10000 seconds	0 seconds	
ooFT3 □□□□0	**Output OFF time when EVT3 output ON** Setting range: 0 to 10000 seconds	0 seconds	
E3c4□ ------	**EVT3 conductivity input error alarm EVT□ type** EVT1□ : EVT1 type EVT2□ : EVT2 type ------ : No action EVT4□ : EVT4 type	No action	
E3Eo□ □□0.00	**EVT3 conductivity input error alarm band when EVT□ output ON** Measurement range low limit to Measurement range high limit	Measurement range low limit	
E3EoT □□□□0	**EVT3 conductivity input error alarm time when EVT□ output ON** Setting range: 0 to 10000 seconds or minutes	0 seconds	
E3Ec□ □□0.00	**EVT3 conductivity input error alarm band when EVT□ output OFF** Measurement range low limit to Measurement range high limit	Measurement range low limit	
E3EcT □□□□0	**EVT3 conductivity input error alarm time when EVT□ output OFF** Setting range: 0 to 10000 seconds or minutes	0 seconds	
MVZN3 □□50.0	**EVT3 cycle variable range** Setting range: 1.0 to 100.0%	50.0%	
cENT3 □□□□0	**EVT3 cycle extended time** Setting range: 0 to 300 seconds	0 seconds	
E3_L□ □□0.00	**EVT3 High/Low limits independent lower side value** Conductivity input: Measurement range low limit to Measurement range high limit Temperature input: 0.0 to 100.0℃	Conductivity input: Measurement range low limit Temperature input: 0.0℃	
E3_H□ □□0.00	**EVT3 High/Low limits independent upper side value** Conductivity input: Measurement range low limit to Measurement range high limit Temperature input: 0.0 to 100.0℃	Conductivity input: Measurement range low limit Temperature input: 0.0℃	
E3_HY □□0.01	**EVT3 hysteresis** Conductivity input: 0.01 to 20% of Measurement range high limit Temperature input: 0.1 to 10.0℃	Conductivity input: 0.01 mS/cm Temperature input: 1.0℃	

13.12 EVT4 Action Group

Character	Setting Item, Setting Range	Factory Default	Data
EVT4F -----	**EVT4 type** -----: No action Ec_L□: Conductivity input low limit action Ec_H□: Conductivity input high limit action TEMPL: Temperature input low limit action TEMPH: Temperature input high limit action ERoUT: Error output FAIL□: Fail output EEUL□: Conductivity input error alarm output Ec_HL: Conductivity input High/Low limits independent action TEMHL: Temperature input High/Low limits independent action	No action	
E4V4□ □□0.00	**EVT4 value** Conductivity input: Measurement range low limit to Measurement range high limit Temperature input: 0.0 to 100.0℃	Conductivity input: Measurement range low limit Temperature input: 0.0℃	
EP4□□ □□0.00	**EVT4 proportional band** Conductivity input: Measurement range low limit to Measurement range high limit Temperature input : 0.0 to 100.0℃	Conductivity input: Measurement range low limit Temperature input: 0.0℃	
E4R5T □□0.00	**EVT4 reset** Conductivity input: ±10% of Measurement span Temperature input: ±10.0℃	Conductivity input: 0.00 mS/cm Temperature input: 0.0℃	
E4dIF HdIF□	**EVT4 hysteresis type** cdIF□: Medium Value HdIF□: Reference Value	Reference Value	
E4dFo □□0.01	**EVT4 ON side** Conductivity input: 0.00 to 20% of Measurement range high limit Temperature input: 0.0 to 10.0℃	Conductivity input: 0.01 mS/cm Temperature input: 1.0℃	
E4dFU □□0.01	**EVT4 OFF side** Conductivity input: 0.00 to 20% of Measurement range high limit Temperature input: 0.0 to 10.0℃	Conductivity input: 0.01 mS/cm Temperature input: 1.0℃	
E4oNT □□□□0	**EVT4 ON delay time** Setting range: 0 to 10000 seconds	0 seconds	
E4oFT □□□□0	**EVT4 OFF delay time** Setting range: 0 to 10000 seconds	0 seconds	
E4c□□ □□□30	**EVT4 proportional cycle** Setting range: 1 to 300 seconds	30 seconds	
E4oLH □□100	**EVT4 output high limit** Setting range: EVT4 output low limit to 100%	100%	

Character	Setting Item, Setting Range	Factory Default	Data
E4oLL □□□□0	**EVT4 output low limit** Setting range: 0% to EVT4 output high limit	0%	
ooN4 □□□□0	**Output ON time when EVT4 output ON** Setting range: 0 to 10000 seconds	0 seconds	
ooF4 □□□□0	**Output OFF time when EVT4 output ON** Setting range: 0 to 10000 seconds	0 seconds	
E4c4□ --------	**EVT4 conductivity input error alarm EVT□ type** EVT1□ : EVT1 type EVT2□ : EVT2 type EVT3□ : EVT3 type -------- : No action	No action	
E4Eo□ □□0.00	**EVT4 conductivity input error alarm band when EVT□ output ON** Measurement range low limit to Measurement range high limit	Measurement range low limit	
E4Eo4 □□□□0	**EVT4 conductivity input error alarm time when EVT□ output ON** Setting range: 0 to 10000 seconds or minutes	0 seconds	
E4Ec□ □□0.00	**EVT4 conductivity input error alarm band when EVT□ output OFF** Measurement range low limit to Measurement range high limit	Measurement range low limit	
E4Ec4 □□□□0	**EVT4 conductivity input error alarm time when EVT□ output OFF** Setting range: 0 to 10000 seconds or minutes	0 seconds	
MVZN4 □□50.0	**EVT4 cycle variable range** Setting range: 1.0 to 100.0%	50.0%	
cEN4 □□□□0	**EVT4 cycle extended time** Setting range: 0 to 300 seconds	0 seconds	
E4_L□ □□0.00	**EVT4 High/Low limits independent lower side value** Conductivity input: Measurement range low limit to Measurement range high limit Temperature input: 0.0 to 100.0℃	Conductivity input: Measurement range low limit Temperature input: 0.0℃	
E4_H□ □□0.00	**EVT4 High/Low limits independent upper side value** Conductivity input: Measurement range low limit to Measurement range high limit Temperature input: 0.0 to 100.0℃	Conductivity input: Measurement range low limit Temperature input: 0.0℃	
E4_HY □□0.01	**EVT4 hysteresis** Conductivity input: 0.01 to 20% of Measurement range high limit Temperature input: 0.1 to 10.0℃	Conductivity input: 0.01 mS/cm Temperature input: 1.0℃	

13.13 Basic Function Group

Character	Setting Item, Setting Range	Factory Default	Data
LocK -----	**Set value lock** ----- : Unlock Lock 1 : Lock 1 Lock2 : Lock 2 Lock3 : Lock 3	Unlock	
cMbL NoML	**Communication protocol** NoML : Shinko protocol ModA : MODBUS ASCII mode ModR : MODBUS RTU mode	Shinko protocol	
cMNo 0	**Instrument number** Setting range: 0 to 95	0	
cMbP 96	**Communication speed** 96 : 9600 bps 192 : 19200 bps 384 : 38400 bps	9600 bps	
cMFt 7EvN	**Data bit/Parity** 8NoN : 8 bits/No parity 7NoN : 7 bits/No parity 8EvN : 8 bits/Even 7EvN : 7 bits/Even 8odd : 8 bits/Odd 7odd : 7 bits/Odd	7 bits/Even	
cMbT 1	**Stop bit** 1 : 1 bit 2 : 2 bits	1 bit	
tRo1 Ec	**Transmission output 1 type** Ec : Conductivity transmission TEMP : Temperature transmission MV 1 : EVT1 MV transmission MV2 : EVT2 MV transmission MV3 : EVT3 MV transmission MV4 : EVT4 MV transmission	Conductivity transmission	
trLH1 20.00	**Transmission output 1 high limit** Conductivity transmission: Transmission output 1 low limit to Measurement range high limit Temperature transmission: Transmission output 1 low limit to 100.0℃ MV transmission: Transmission output 1 low limit to 100.0%	Conductivity transmission: Measurement range high limit Temperature transmission:100.0℃ MV transmission:100.0%	

Character	Setting Item, Setting Range	Factory Default	Data
TRLL1 □□0.00	**Transmission output 1 low limit** Conductivity transmission: Measurement range low limit to Transmission output 1 high limit Temperature transmission: 0.0℃ to Transmission output 1 high limit MV transmission: 0.0% to Transmission output 1 high limit	Conductivity transmission: Measurement range low limit Temperature transmission: 0.0℃ MV transmission: 0.0%	
TRo42 TEMP□	**Transmission output 2 type** Ec□□□ : Conductivity transmission TEMP□ : Temperature transmission MV2□□ : EVT2 MV transmission MV3□□ : EVT3 MV transmission MV4□□ : EVT4 MV transmission	Temperature transmission	
TRLH2 □ 100.0	**Transmission output 2 high limit** Conductivity transmission: Transmission output 2 low limit to Measurement range high limit Temperature transmission: Transmission output 2 low limit to 100.0℃ MV transmission: Transmission output 2 low limit to 100.0%	Conductivity transmission: Measurement range high limit Temperature transmission:100.0℃ MV transmission:100.0%	
TRLL2 □□□0.0	**Transmission output 2 low limit** Conductivity transmission: Measurement range low limit to Transmission output 2 high limit Temperature transmission: 0.0℃ to Transmission output 2 high limit MV transmission: 0.0% to Transmission output 2 high limit	Conductivity transmission: Measurement range low limit Temperature transmission: 0.0℃ MV transmission: 0.0%	
TRcH1 bEFH□	**Transmission output 1 status when calibrating** bEFH□: Last value HOLD SETH□: Set value HOLD PVH□□: Measured value	Last value HOLD	
TRHE1 □□0.00	**Transmission output 1 value HOLD when calibrating** Conductivity transmission: Measurement range low limit to Measurement range high limit Temperature transmission: 0.0 to 100.0℃ MV transmission: 0.0 to 100.0%	Conductivity transmission: Measurement range low limit Temperature transmission: 0.0℃ MV transmission: 0.0%	
TRc42 bEFH□	**Transmission output 2 status when calibrating** bEFH□: Last value HOLD SETH□: Set value HOLD PVH□□: Measured value	Last value HOLD	

Character	Setting Item, Setting Range	Factory Default	Data
tR4E2 0.0	**Transmission output 2 value HOLD when calibrating**	Conductivity transmission: Measurement range low limit Temperature transmission: 0.0℃ MV transmission: 0.0%	
	Conductivity transmission: Measurement range low limit to Measurement range high limit Temperature transmission: 0.0 to 100.0℃ MV transmission: 0.0 to 100.0%		
bKLT ALL	**Backlight selection** ALL : All are backlit. Ec : Conductivity Display TEMP : Temperature Display Ac : Action indicators EcTMP : Conductivity Display + Temperature Display EcAc : Conductivity Display + Action indicators TMPAc : Temperature Display + Action indicators	All are backlit.	
coLR REd	**Conductivity color** GRN : Green REd : Red oRG : Orange EcGR : Conductivity color changes continuously.	Red	
cLP 10.00	**Conductivity color reference value** Setting range: 0.00 to Measurement range high limit	50% of Measurement range high limit	
cLRG 0.10	**Conductivity color range** Setting range: 0.10 to Measurement range high limit	0.10 mS/cm	
dPTM 0	**Backlight time** Setting range: 0 to 99 minutes	0 minutes	
bER4L --------	**Bar graph indication** -------- : No indication TRoT 1 : Transmission output 1 TRoT2 : Transmission output 2	No indication	
INERR oFF	**EVT output when input errors occur** oFF : Disabled oN : Enabled	Disabled	
oFdP oFF	**Temperature Display when no temperature compensation** oFF : Unlit 4Td : Reference temperature PV : Measured value	Unlit	
M_4 4Ec	**Conductivity input error alarm time unit** 4Ec : Second(s) MIN : Minute(s)	Second(s)	

13.14 Error Code List

If the following errors occur, corresponding error codes will be flashing in the Temperature Display.

Error Code	Error Type	Error Contents	Description	Occur-rence
ERR01	Fail	Temperature sensor burnout	Temperature sensor lead wire is burnt out.	When measuring or calibrating
ERR02	Fail	Temperature sensor short-circuited	Temperature sensor lead wire is short-circuited.	
ERR03	Error	Outside temperature compensation range	Measured temperature has exceeded 110.0℃.	
ERR04	Error	Outside temperature compensation range	Measured temperature is less than 0.0℃.	

***** Inquiries *****

For any inquiries about this unit, please contact our agency or the vendor where you purchased the unit after checking the following.

[Example]

- Model ---------- AER-102-ECH
- Serial number ---------- No. 195F05000

In addition to the above, please let us know the details of the malfunction, or discrepancy, and the operating conditions.

SHINKO TECHNOS CO., LTD.
OVERSEAS DIVISION
Head Office: 2-5-1, Senbahigashi, Minoo, Osaka, Japan
URL: http://www.shinko-technos.co.jp/e/ Tel : +81-72-727-6100
E-mail: overseas@shinko-technos.co.jp Fax: +81-72-727-7006

No.AER11ECE6 2019.10