HR-706 Operation Flow Chart

CONTENTS

Normal Operation Mode : Recording, Changing the Display, Engineering List Printing, Manual Printing, List Printing....3
Setup Mode : Setting the Range (Current/Voltage, Thermocouple, Resistance temperature detector)....4
Setup Mode : Setting the Range (scaling)....5
Setup Mode : Setting the Range (Square Root)....6
Setup Mode : Setting the Range (Decade)....7
Setup Mode : Setting the Range (Difference, Sum, Average)....8
Setup Mode : Setting the Range (Skip)....9
Setup Mode : Setting the Alarm....10
Setup Mode : Setting the Unit....11
Setup Mode : Setting the Chart Feed Speed, Setting the Date and Time....12
Setup Mode : Copying the Setting Data....13
Setup Mode : Setting Other Functions(Printing Cycle, Zone Recording)....14
Setup Mode : Setting Other Functions(Partial Compression/Expansion)....15
Setup Mode : Setting Other Functions(Digital Printing)....16
Setup Mode : Setting Other Functions(Tag)....17
Setup Mode : Setting Other Functions(Comments)....18
Engineering Mode : Alarm Hysteresis, Burnout ON/OFF....19
Engineering Mode : Channel Offset....20
Engineering Mode : Reference Junction Compensation....21
Engineering Mode : Changing the Printing Color....22
Engineering Mode : Recording RUN/STOP Trigger Setting, Channel/Tag Printing Selection, Alarm printing ON/OFF....23
Engineering Mode : Logging printing ON/OFF, Scale printing ON/OFF, Synchronous/Asynchronous....24
Engineering Mode : Setting the Communication Function, Initializing the Setup Data....25
Engineering Mode : DI Functions....26
Engineering Mode : Temperature Unit Selection, Point Calibration....27
Engineering Mode : Data Calibration(Voltage)....28
Engineering Mode : Data Calibration (Resistance temperature detector)....29
Engineering Mode : Data Calibration (Terminal Temperature)....30
Default value....31

WARNING

When calibrating data, connect the equipment according to Section 9.5 of the instruction manual. Data calibration must be performed correctly.

Operators possessing knowledge of electricity and control related matters should perform the calibration after careful reading of Sections 7.2 and 9.5 of the instruction manual.

(Shinko Technos Co., Ltd. is not liable for damages incurred if calibration is performed other than prescribed in the instruction manual.)

Shinko

Normal Operation Mode : Recording, Changing the Display, Engineering List Printing, Manual Printing, List Printing

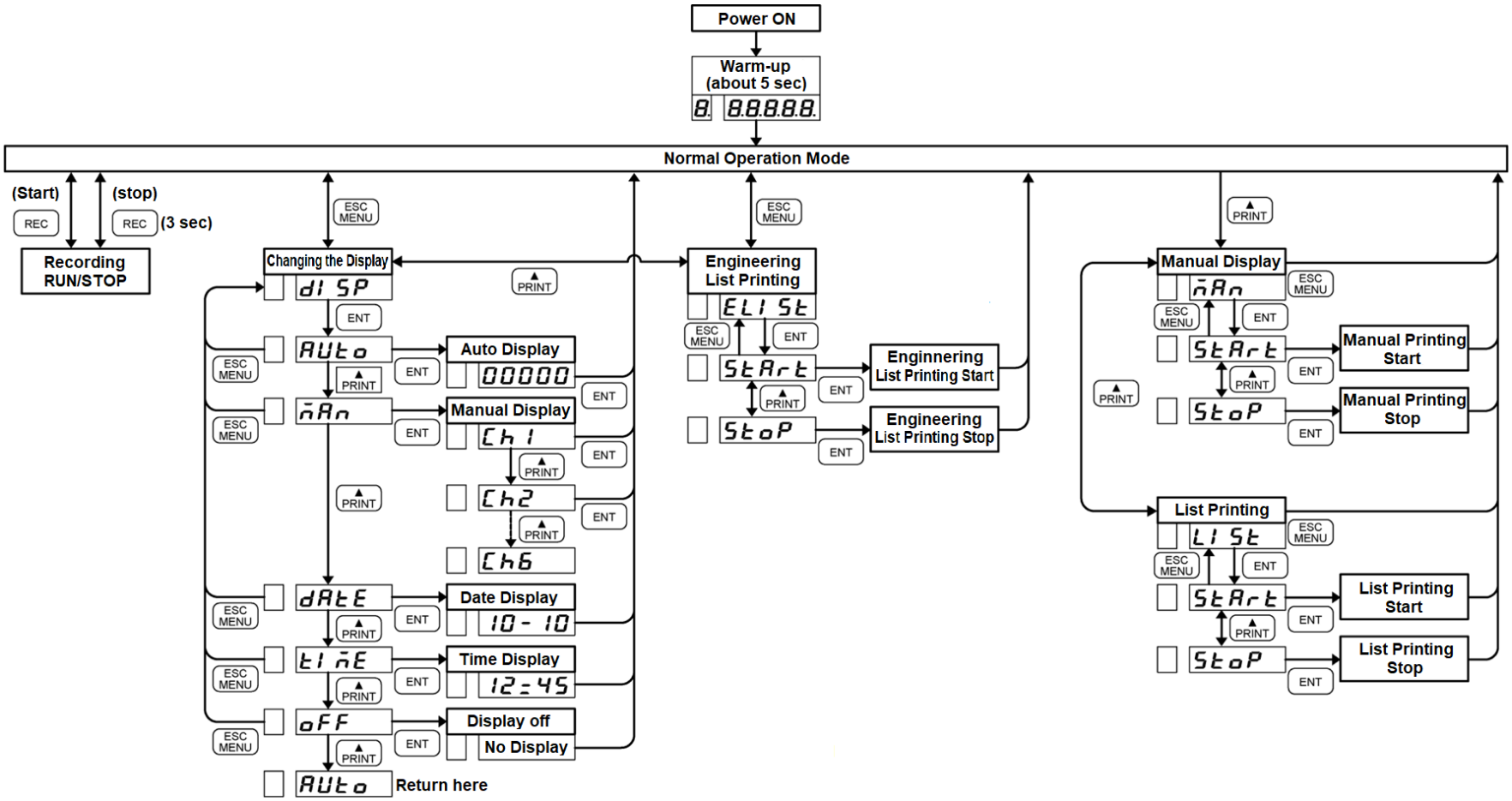

Setup Mode : Setting the Range (Current/Voltage, Thermocouple, Resistance temperature detector)

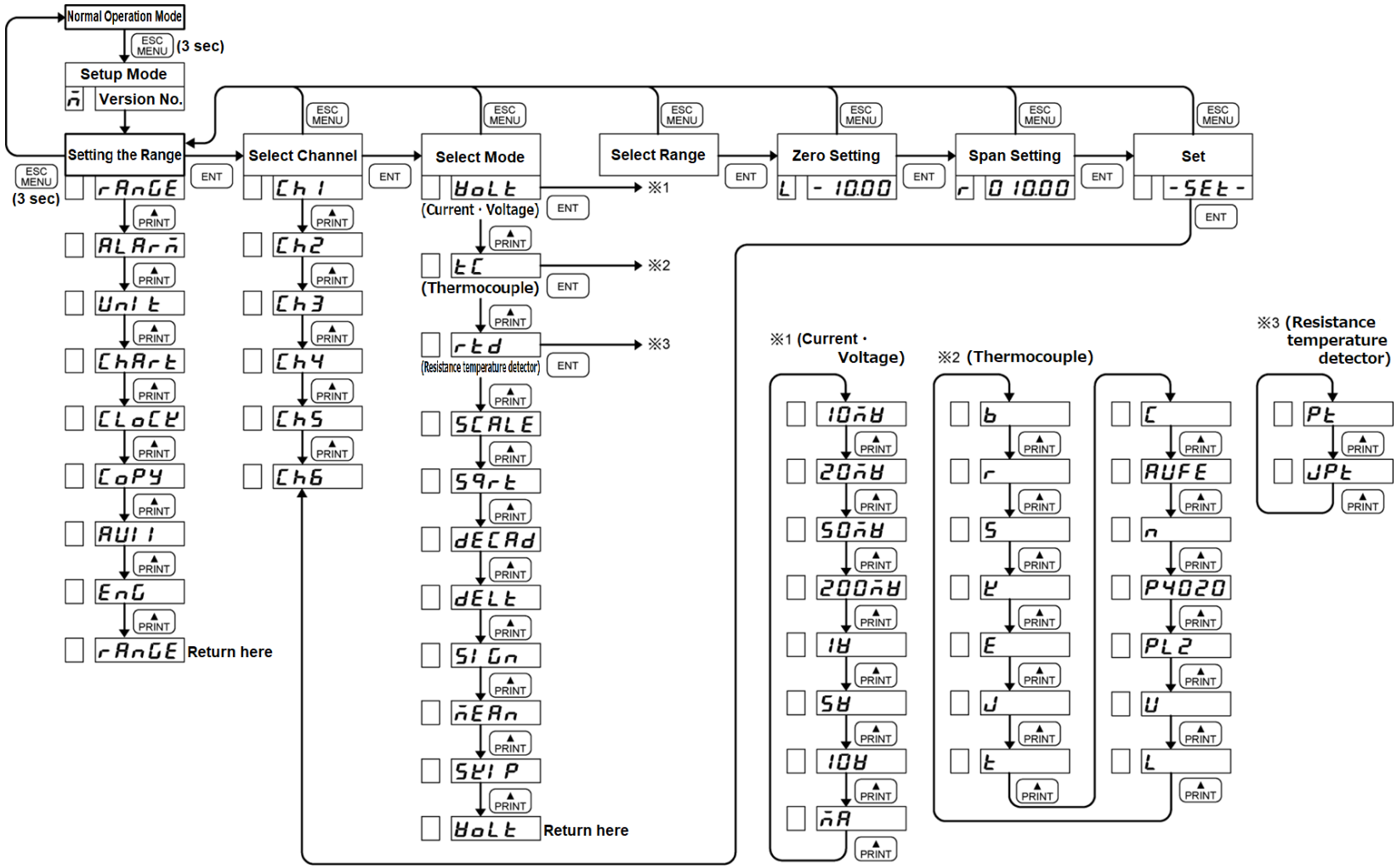

Setup Mode : Setting the Range (scaling)

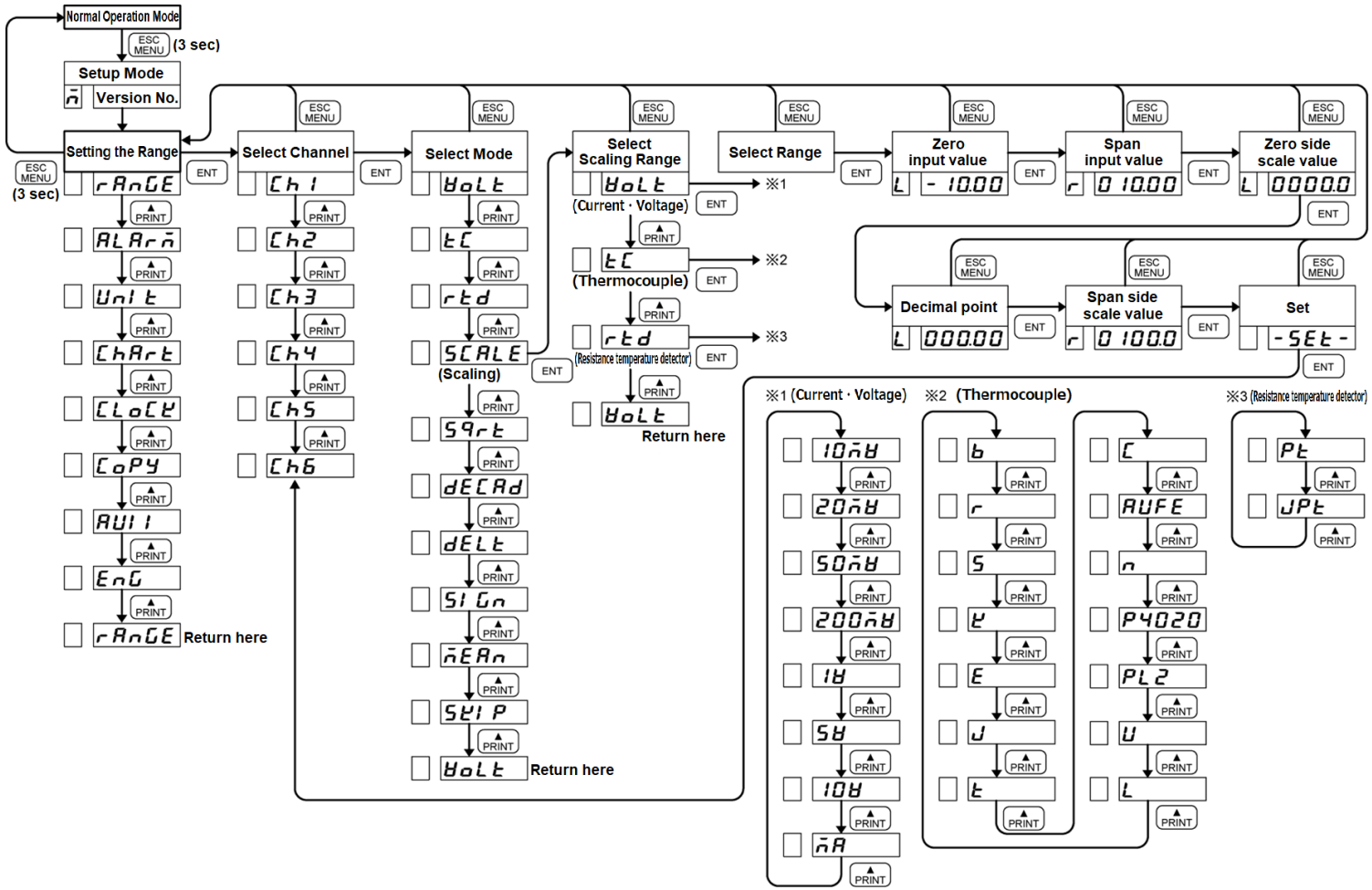

Setup Mode : Setting the Range (Square Root)

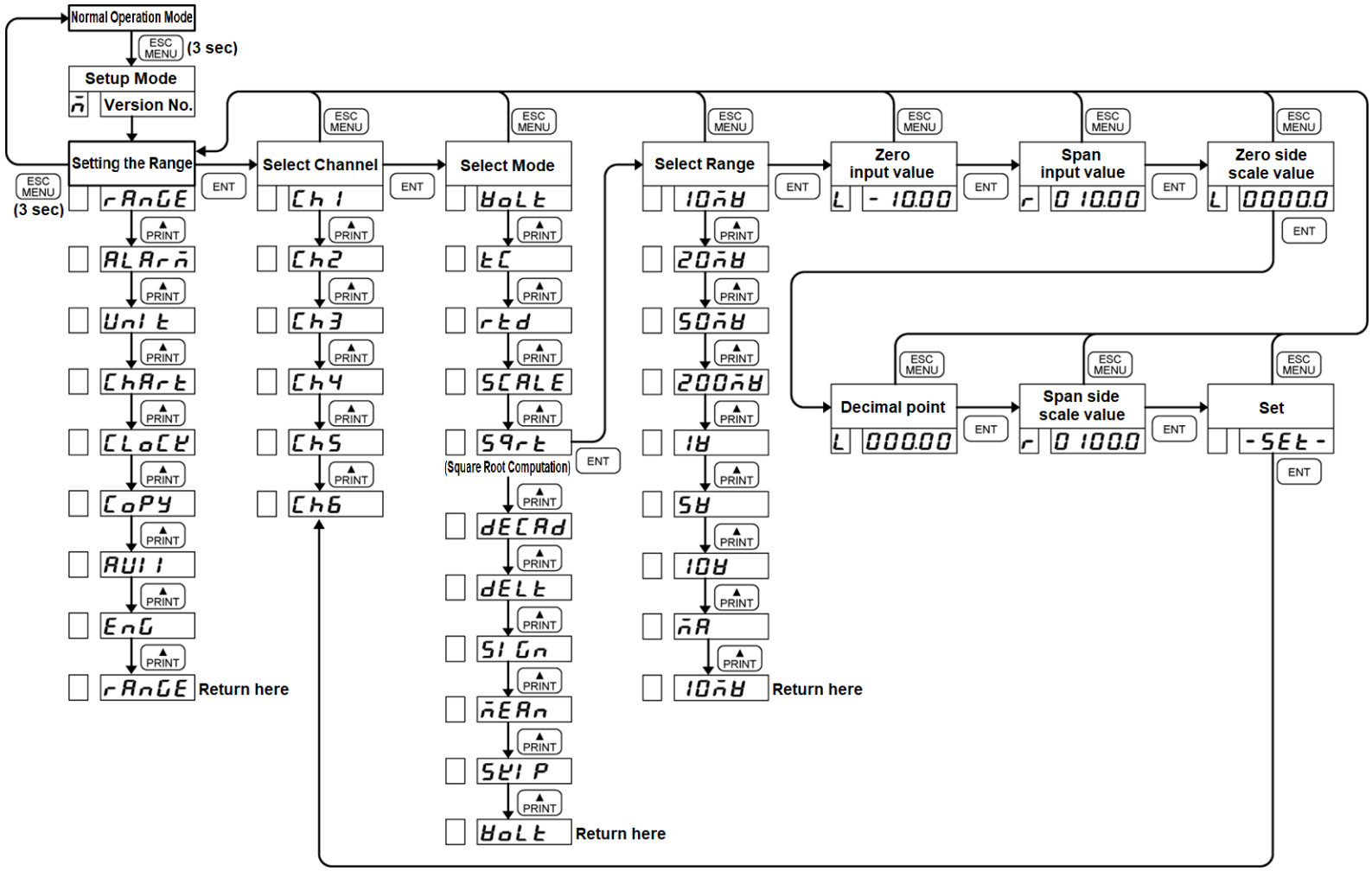

Setup Mode : Setting the Range (Decade)

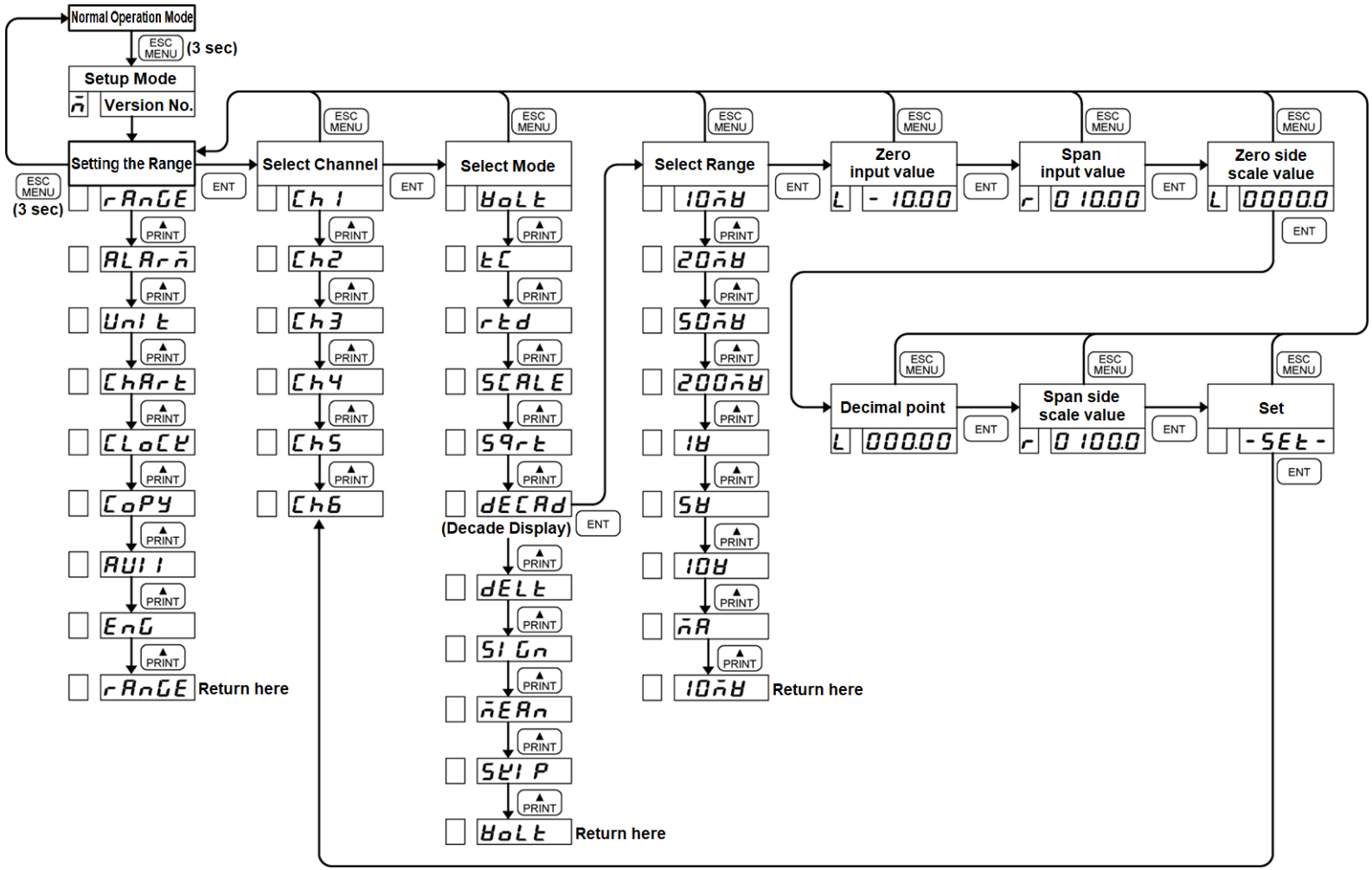

Setup Mode : Setting the Range (Difference, Sum, Average)

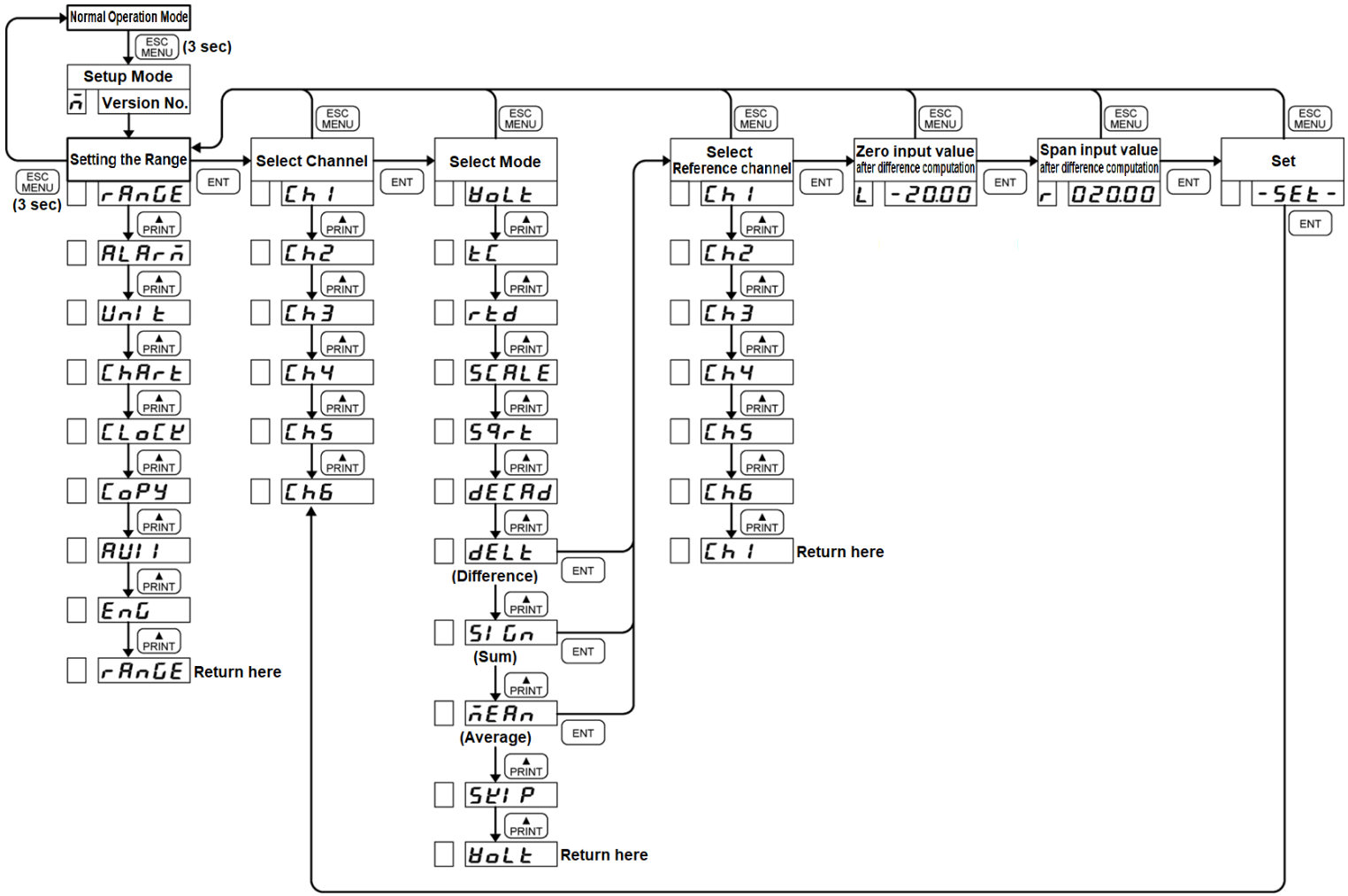

Setup Mode : Setting the Range (Skip)

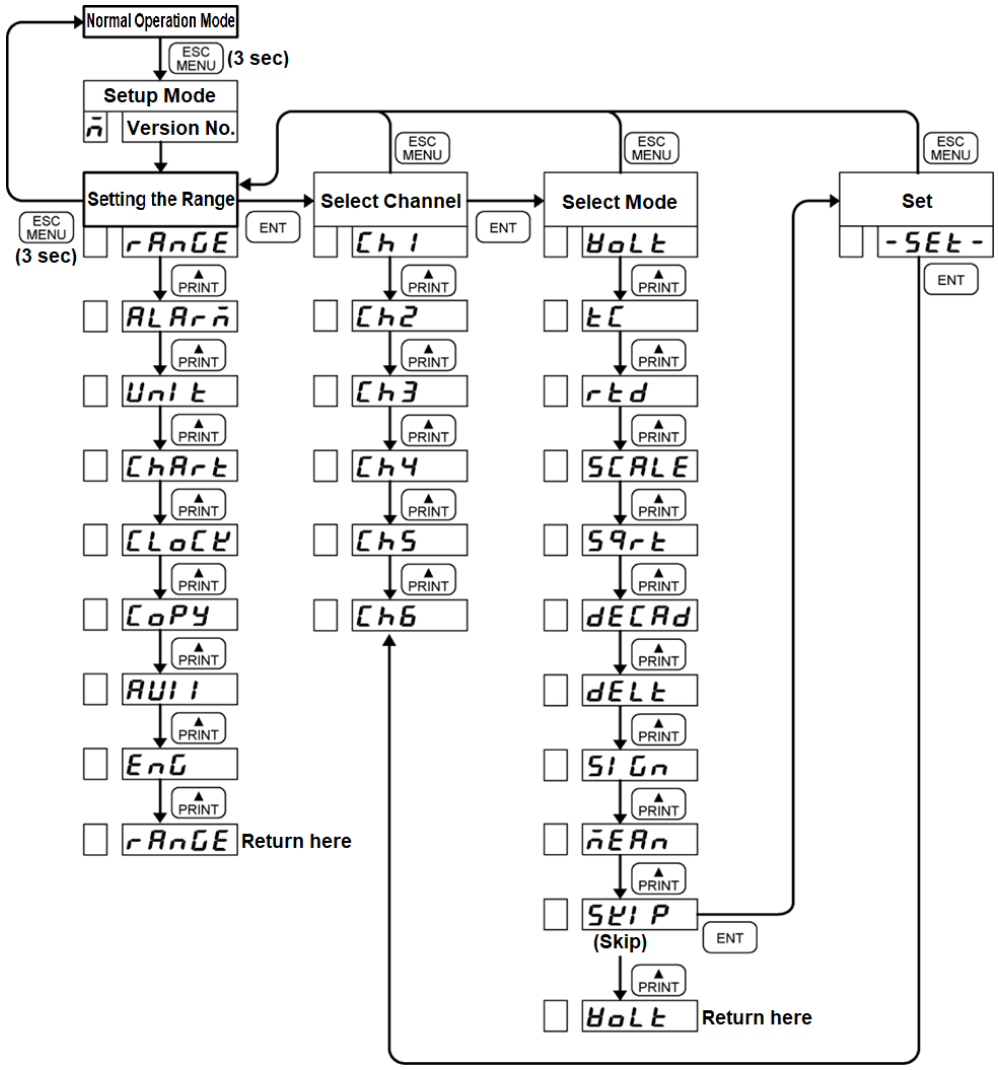

Setup Mode : Setting the Alarm

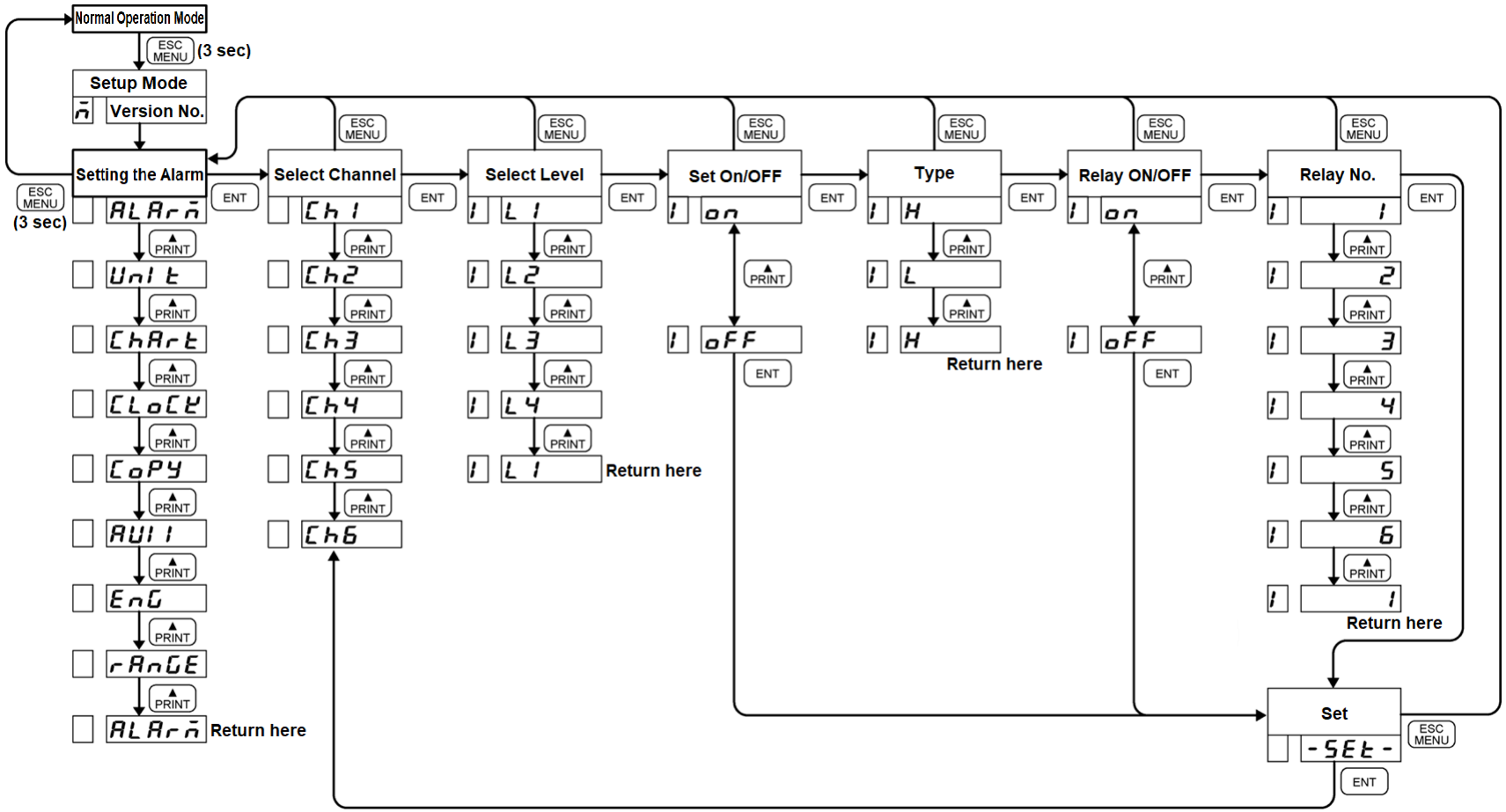

Setup Mode : Setting the Unit

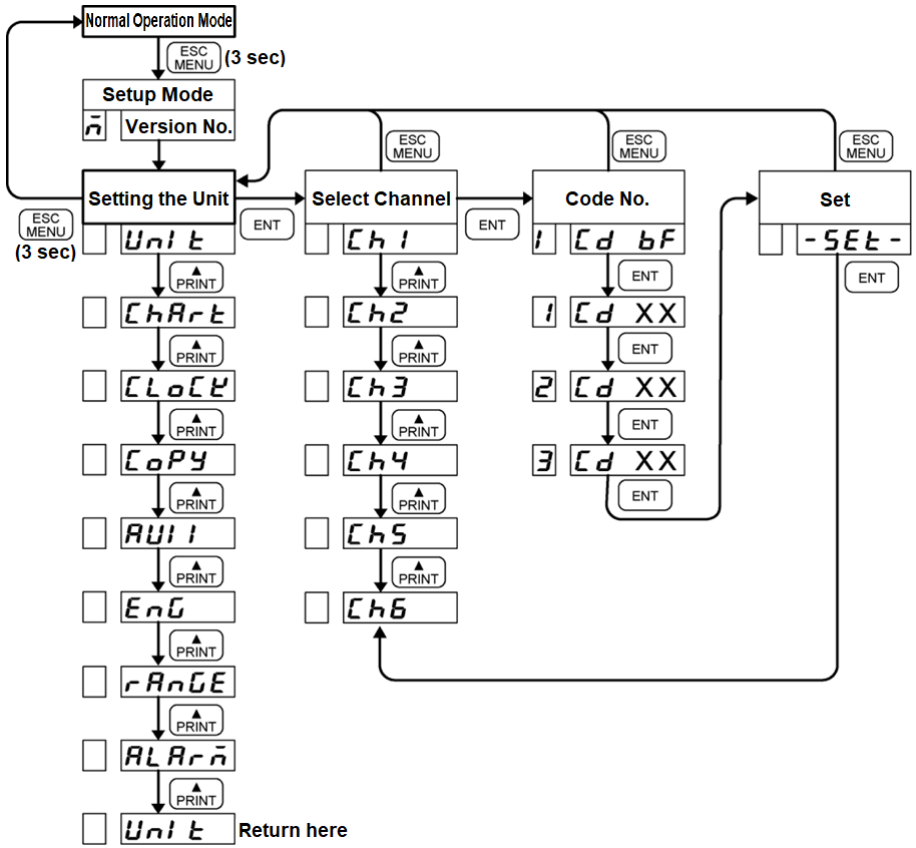

Setup Mode : Setting the Chart Feed Speed, Setting the Date and Time

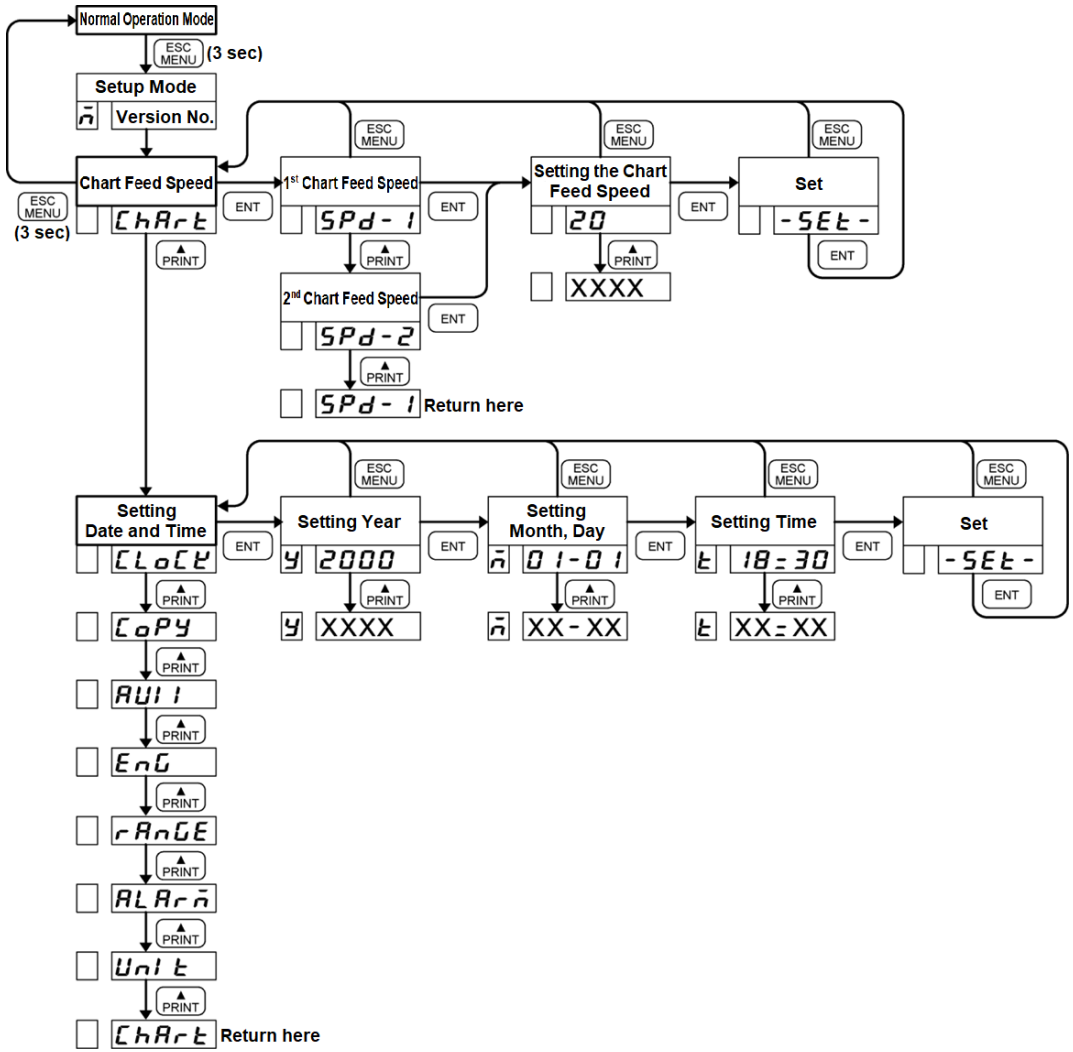

Setup Mode : Copying the Setting Data

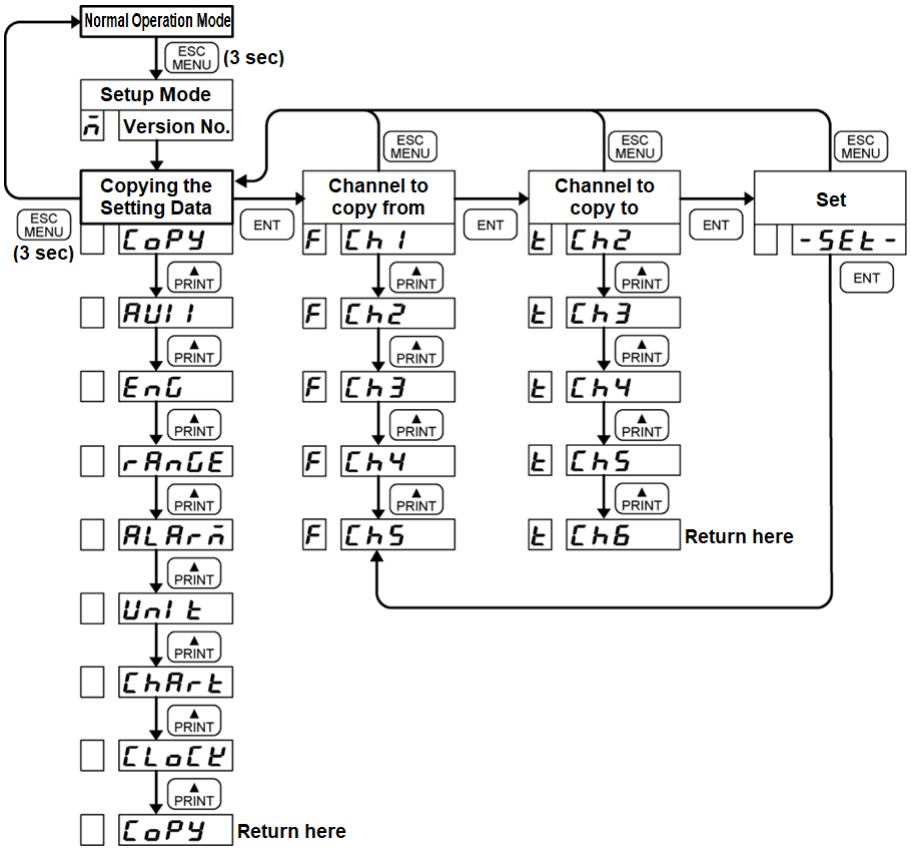

Setup Mode : Setting Other Functions(Printing Cycle, Zone Recording)

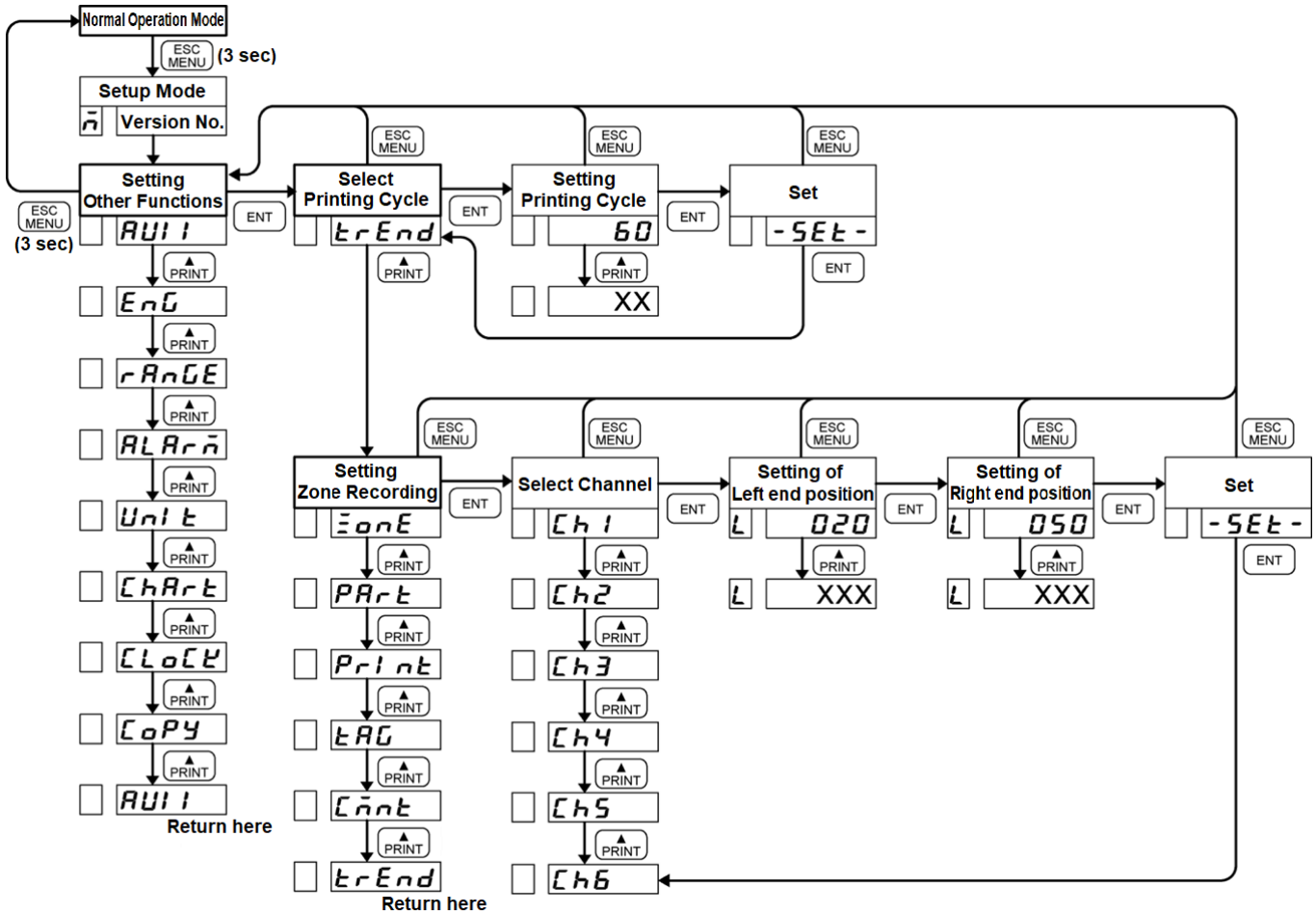

Setup Mode : Setting Other Functions(Partial Compression/Expansion)

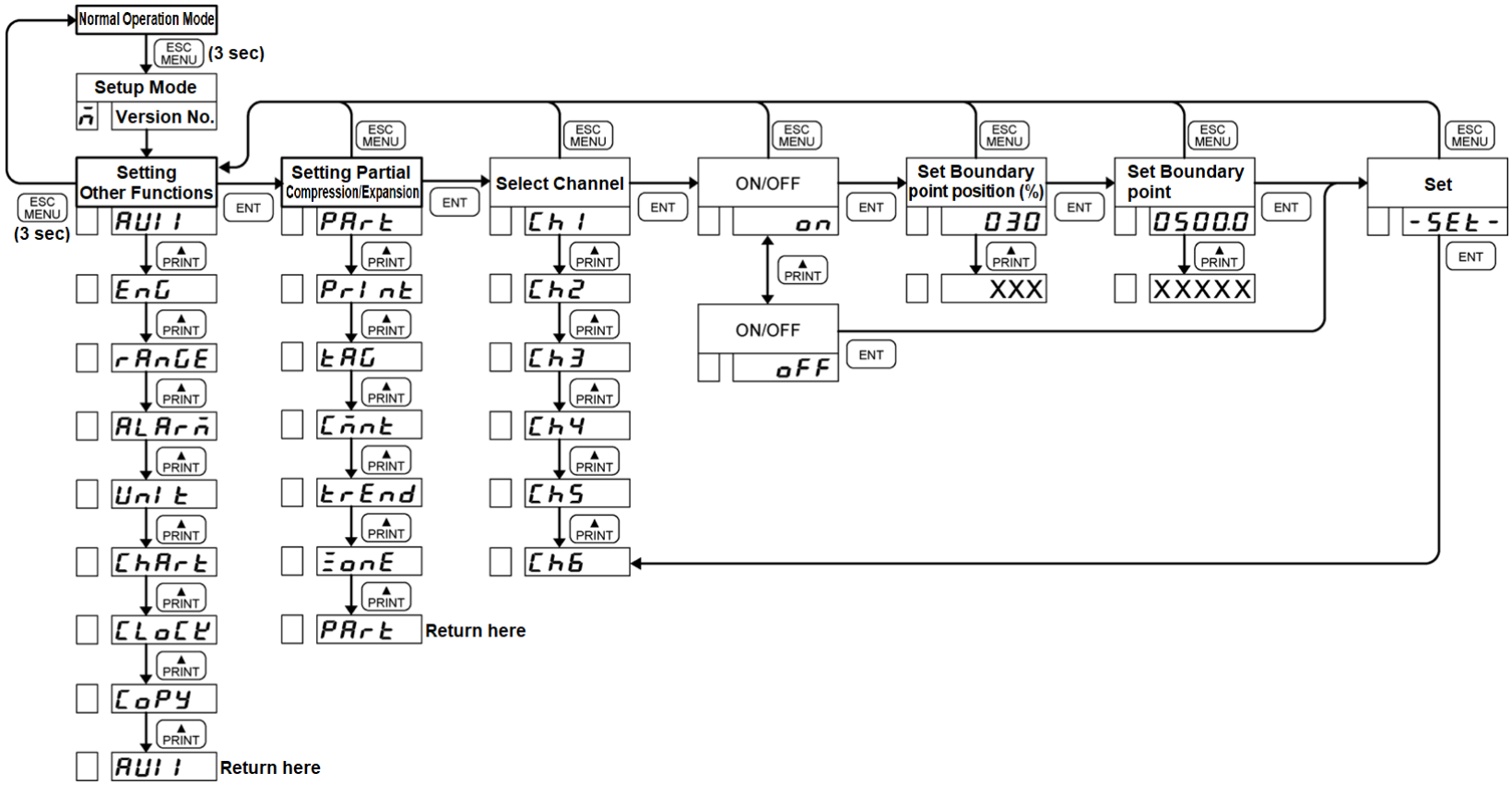

Setup Mode : Setting Other Functions(Digital Printing)

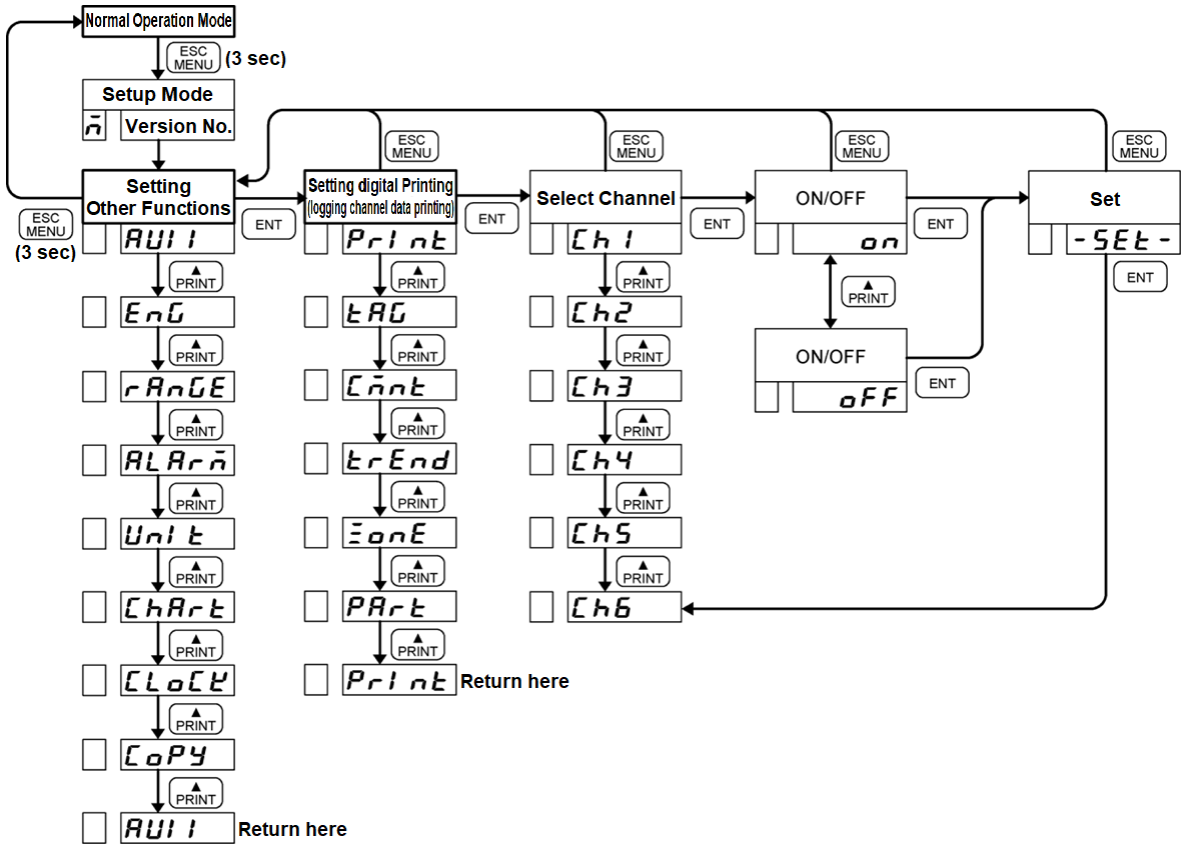

Setup Mode : Setting Other Functions(Tag)

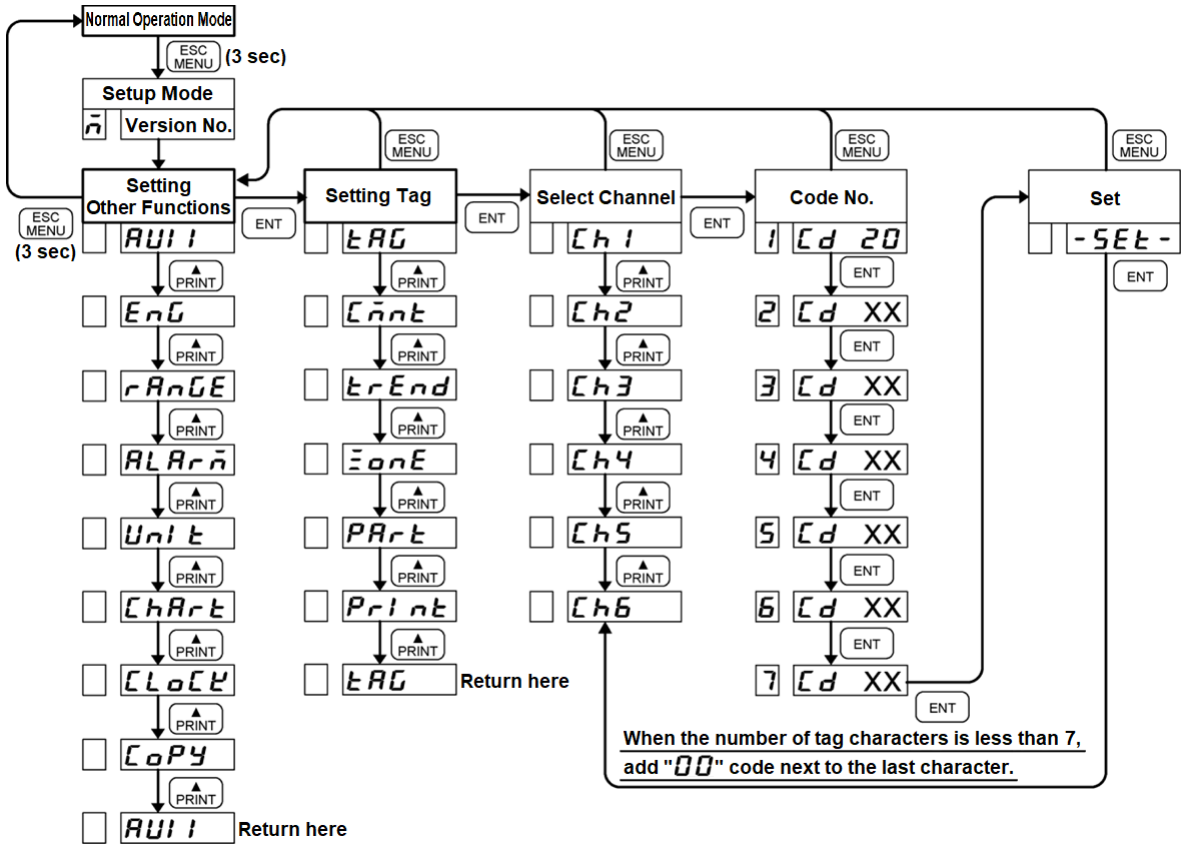

Setup Mode : Setting Other Functions(Comments)

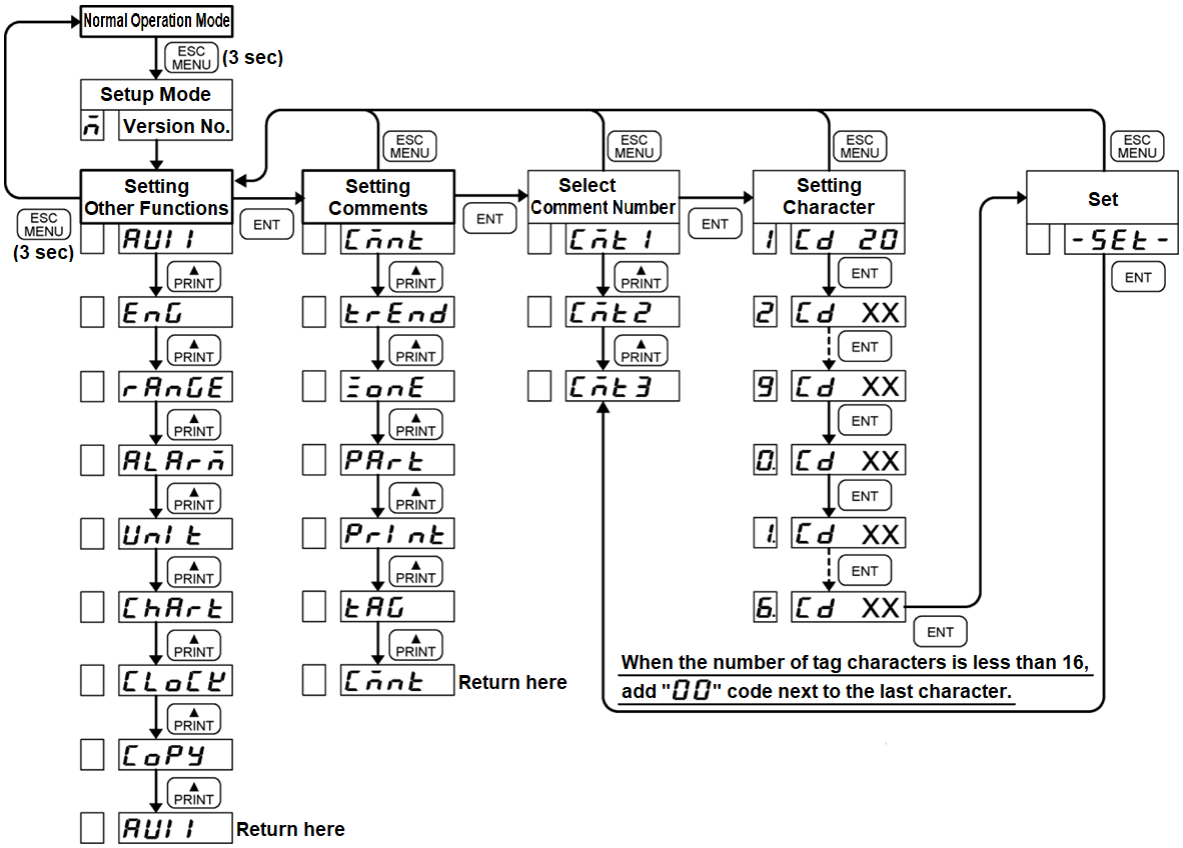

Engineering Mode : Alarm Hysteresis, Burnout ON/OFF

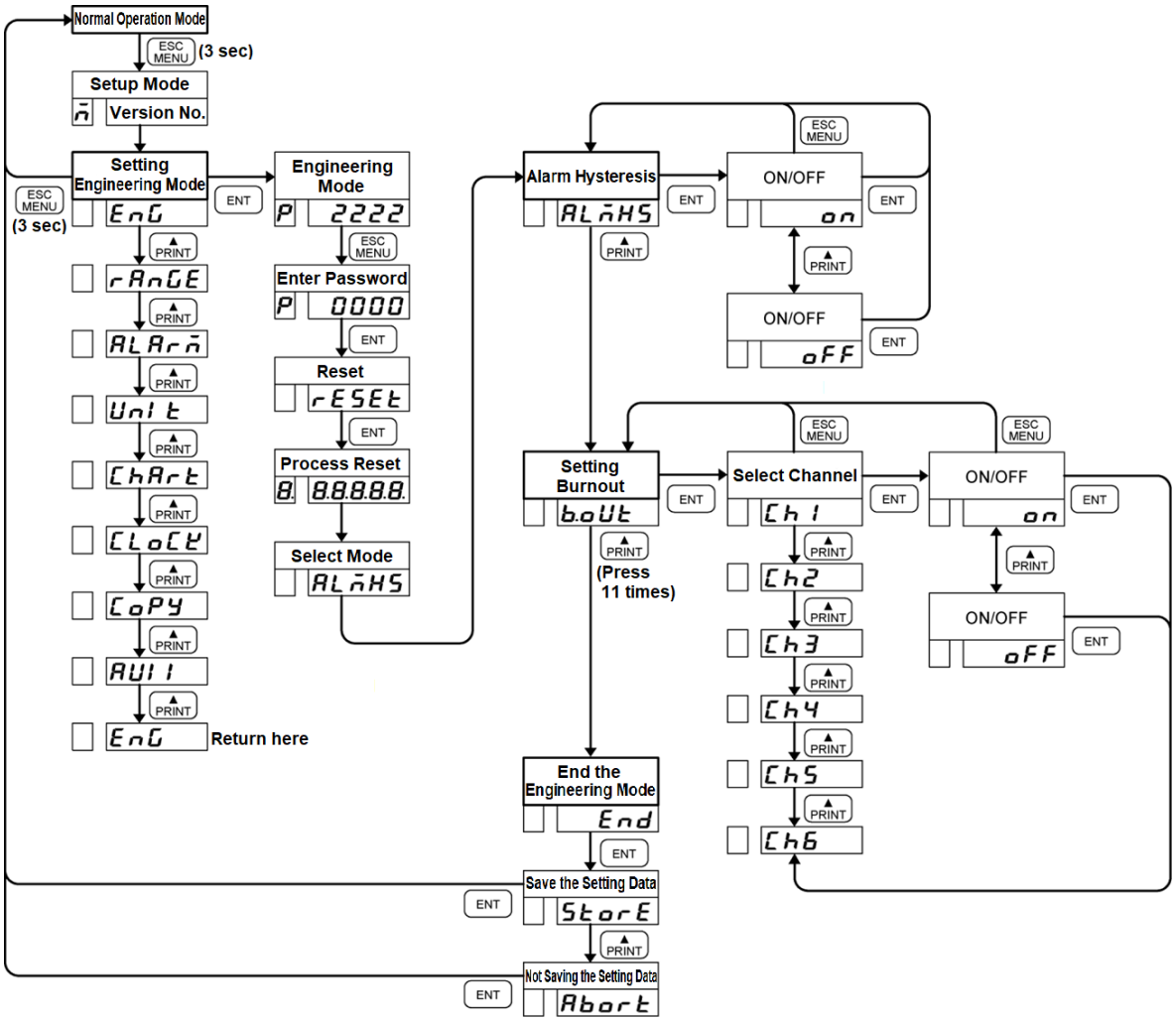

Engineering Mode : Channel Offset

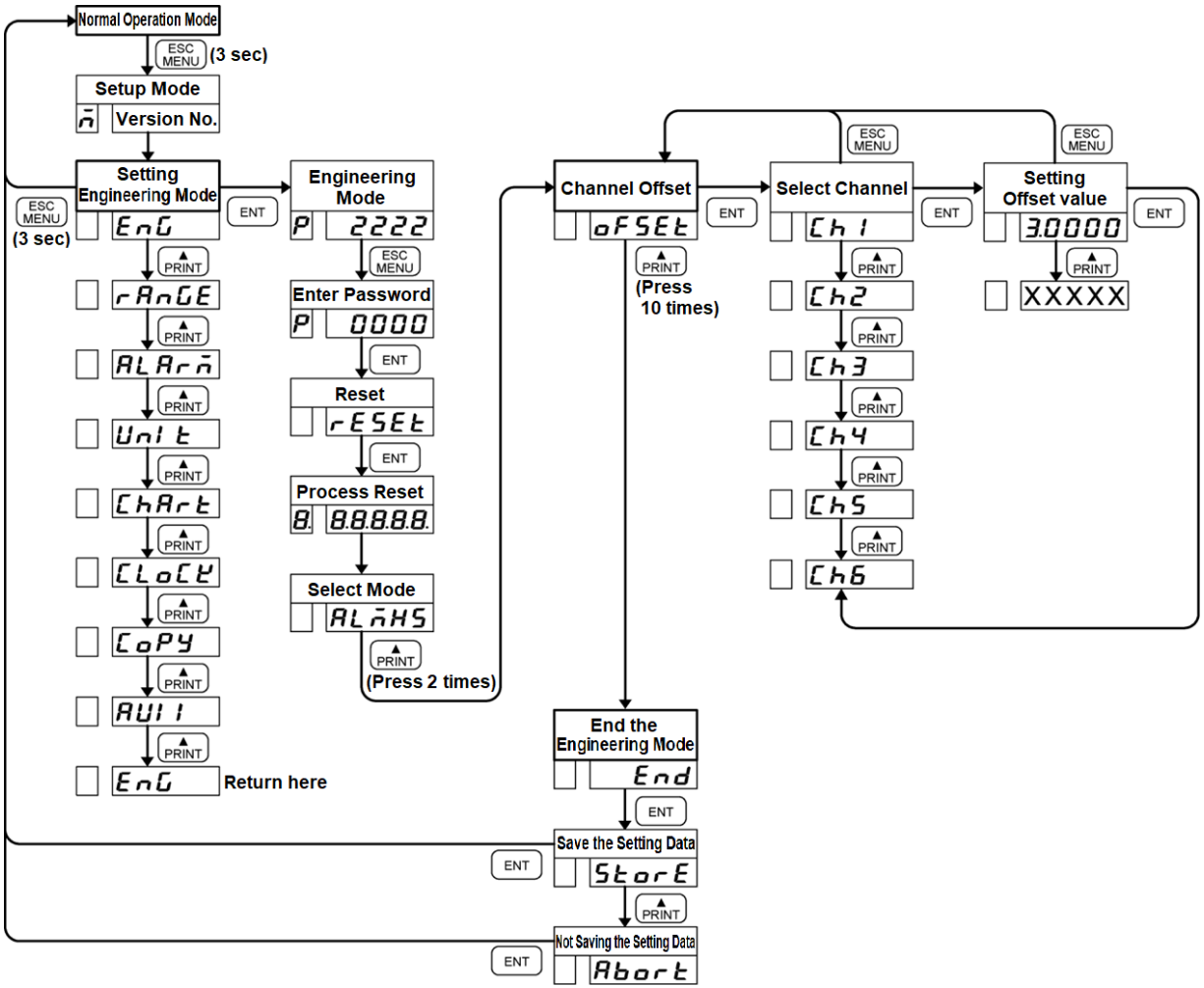

Engineering Mode : Reference Junction Compensation

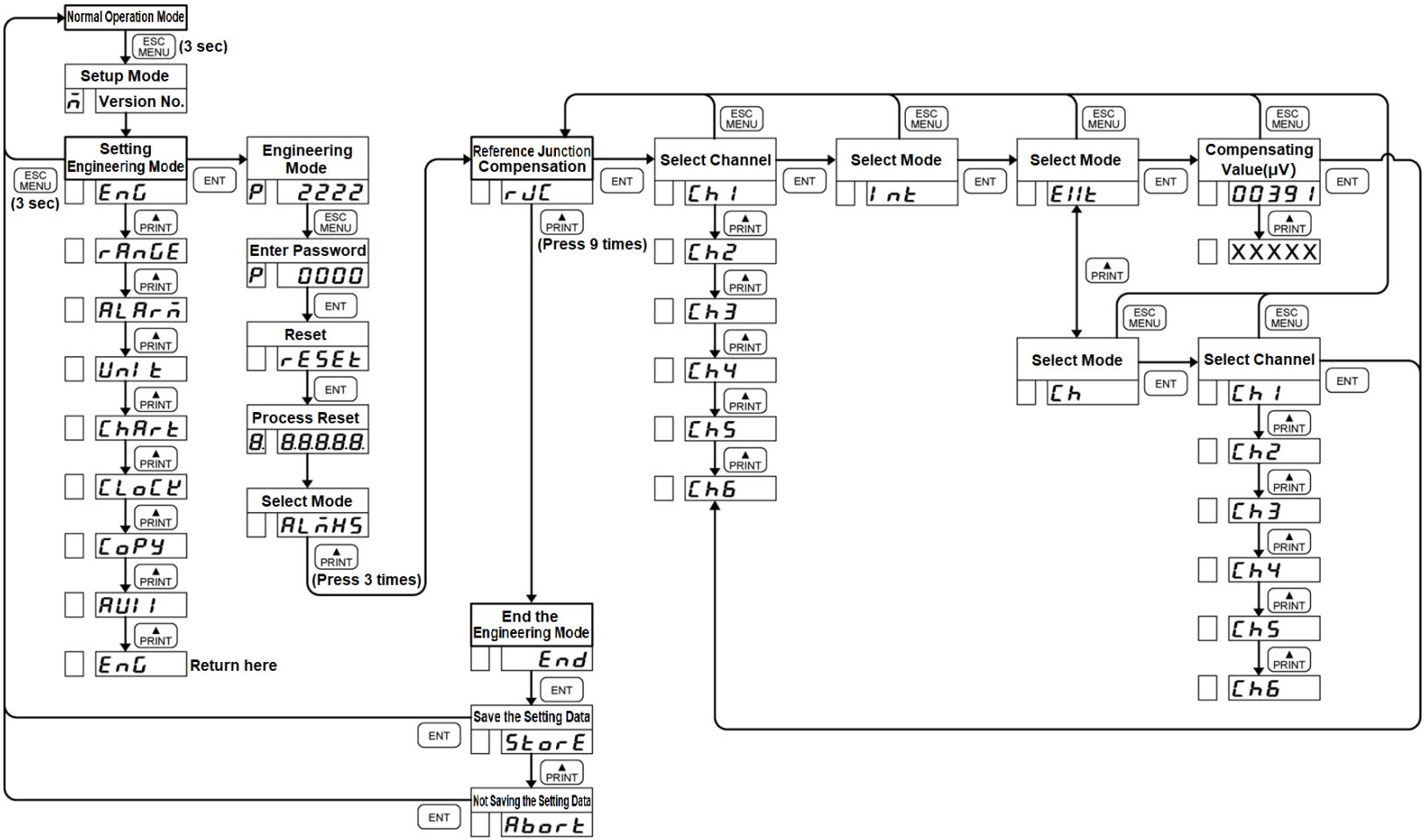

Engineering Mode : Changing the Printing Color

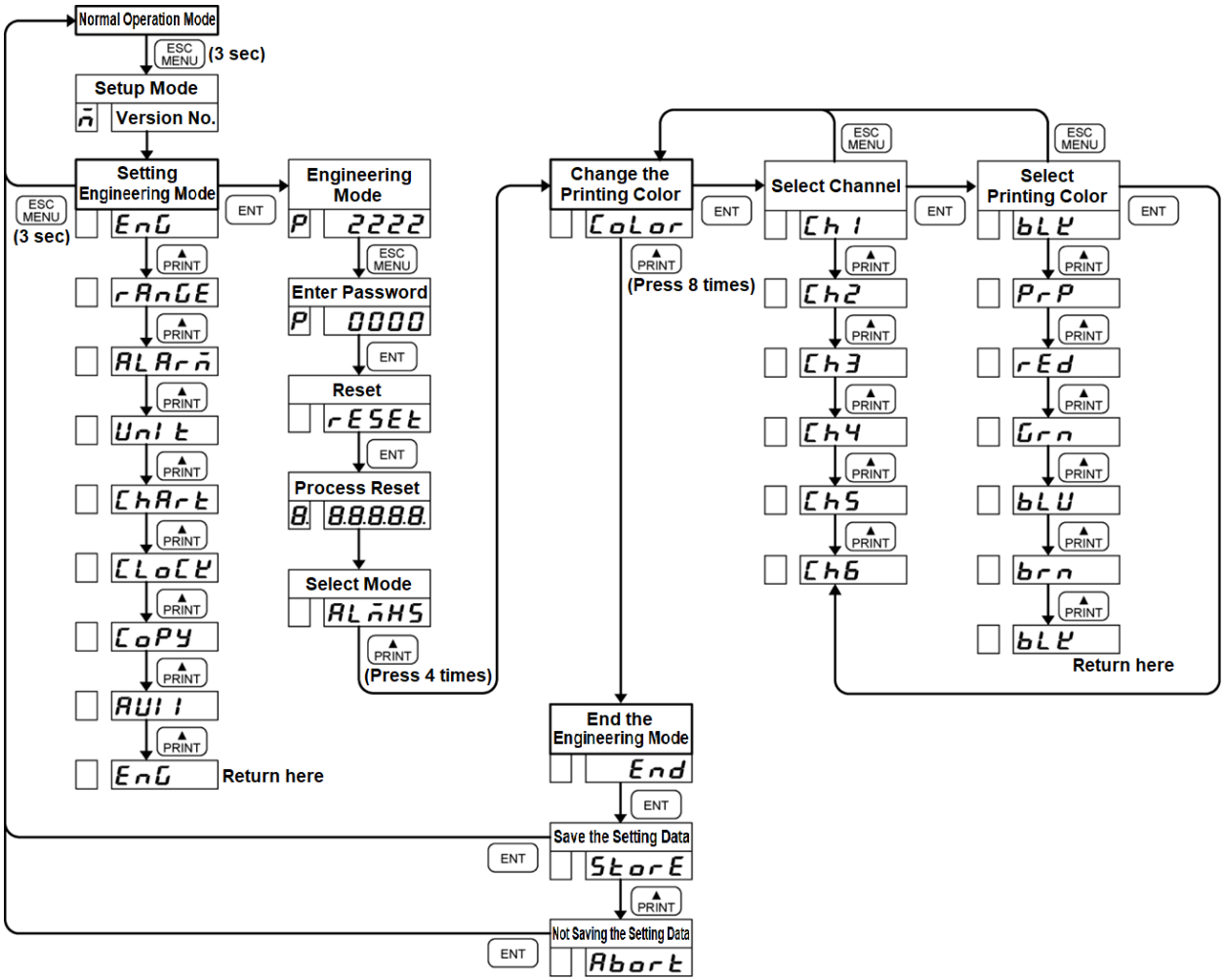

Engineering Mode : Recording RUN/STOP Trigger Setting, Channel/Tag Printing Selection, Alarm printing ON/OFF

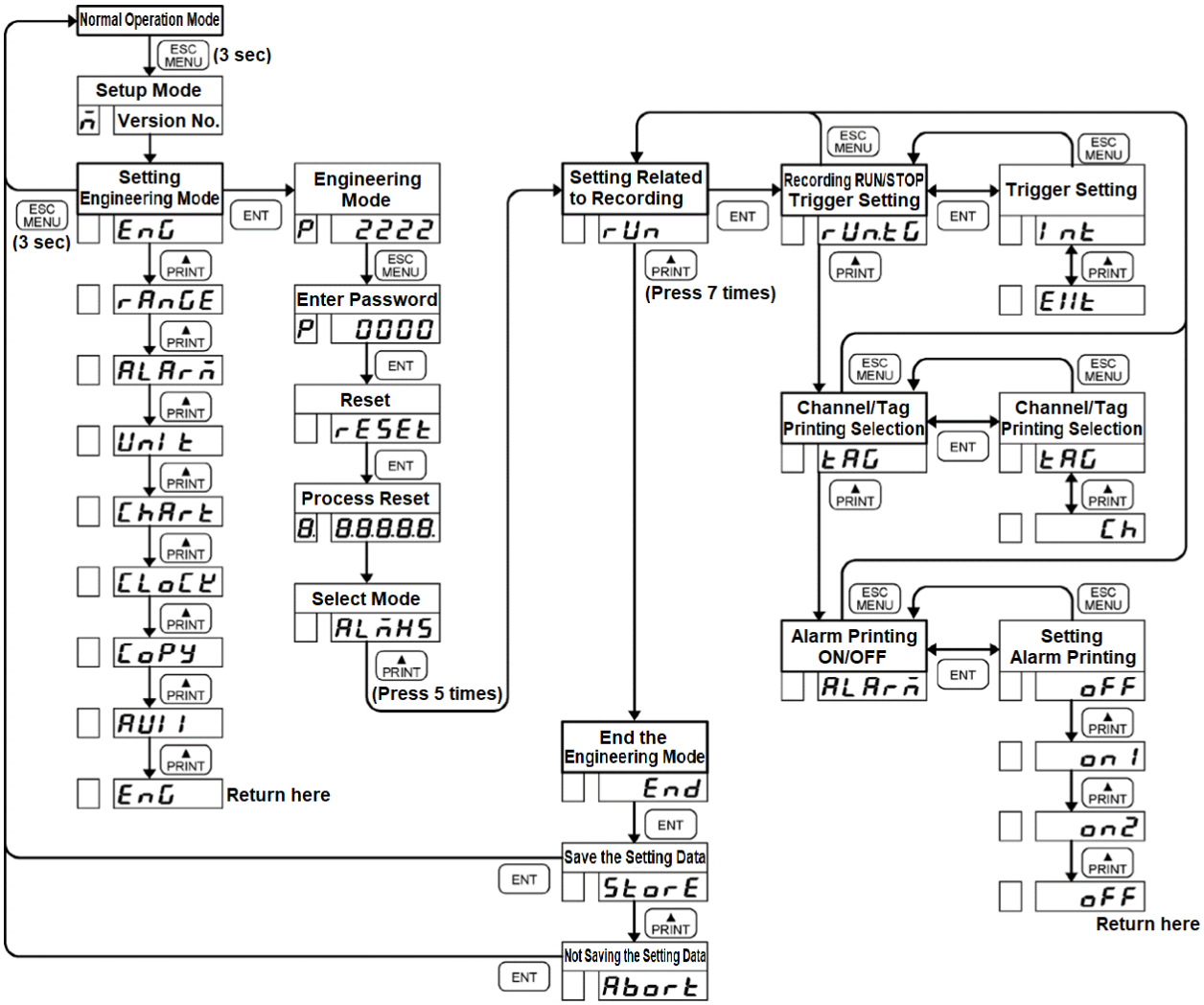

Engineering Mode : Logging printing ON/OFF, Scale printing ON/OFF, Synchronous/Asynchronous

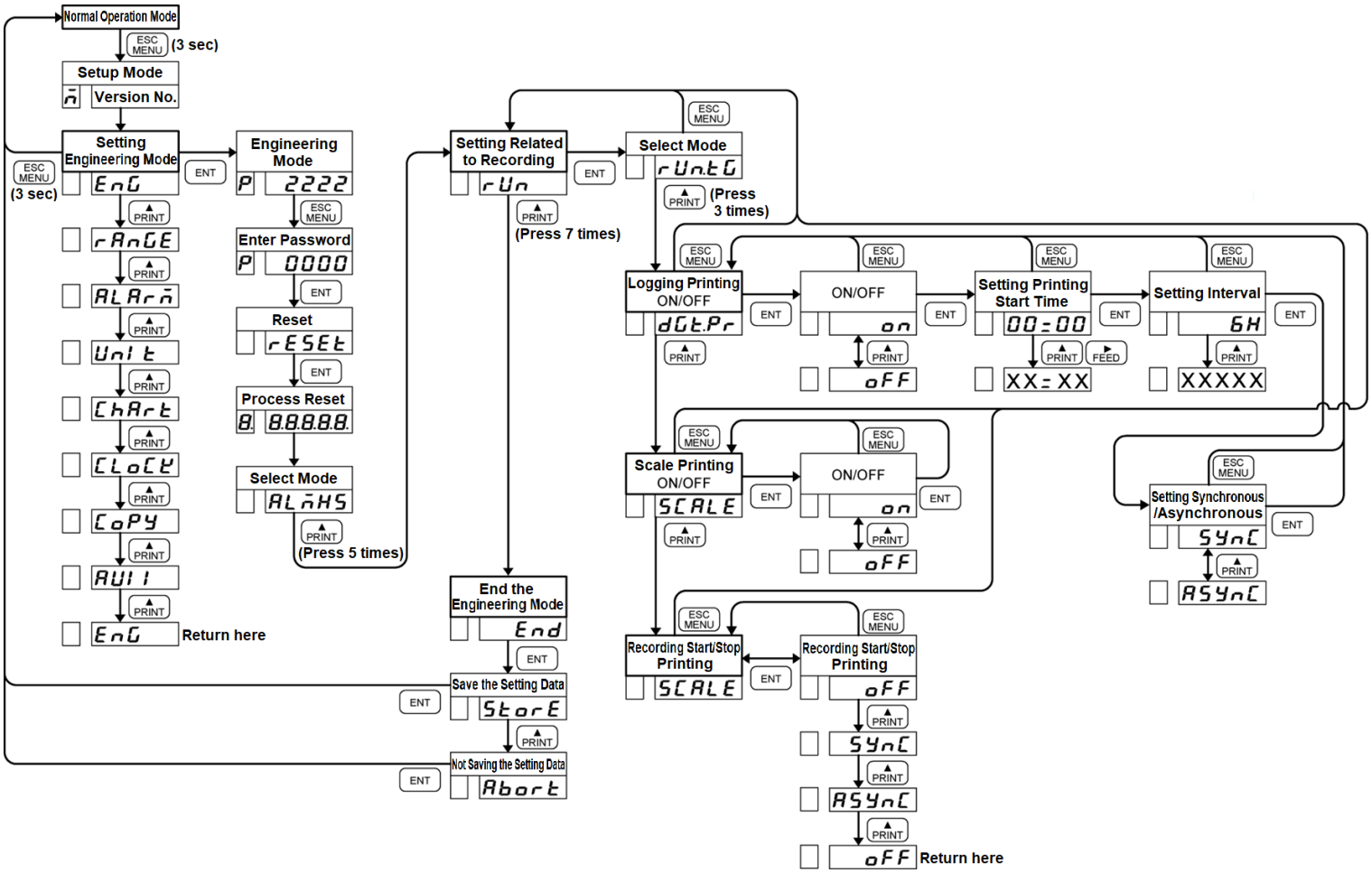

Engineering Mode : Setting the Communication Function, Initializing the Setup Data

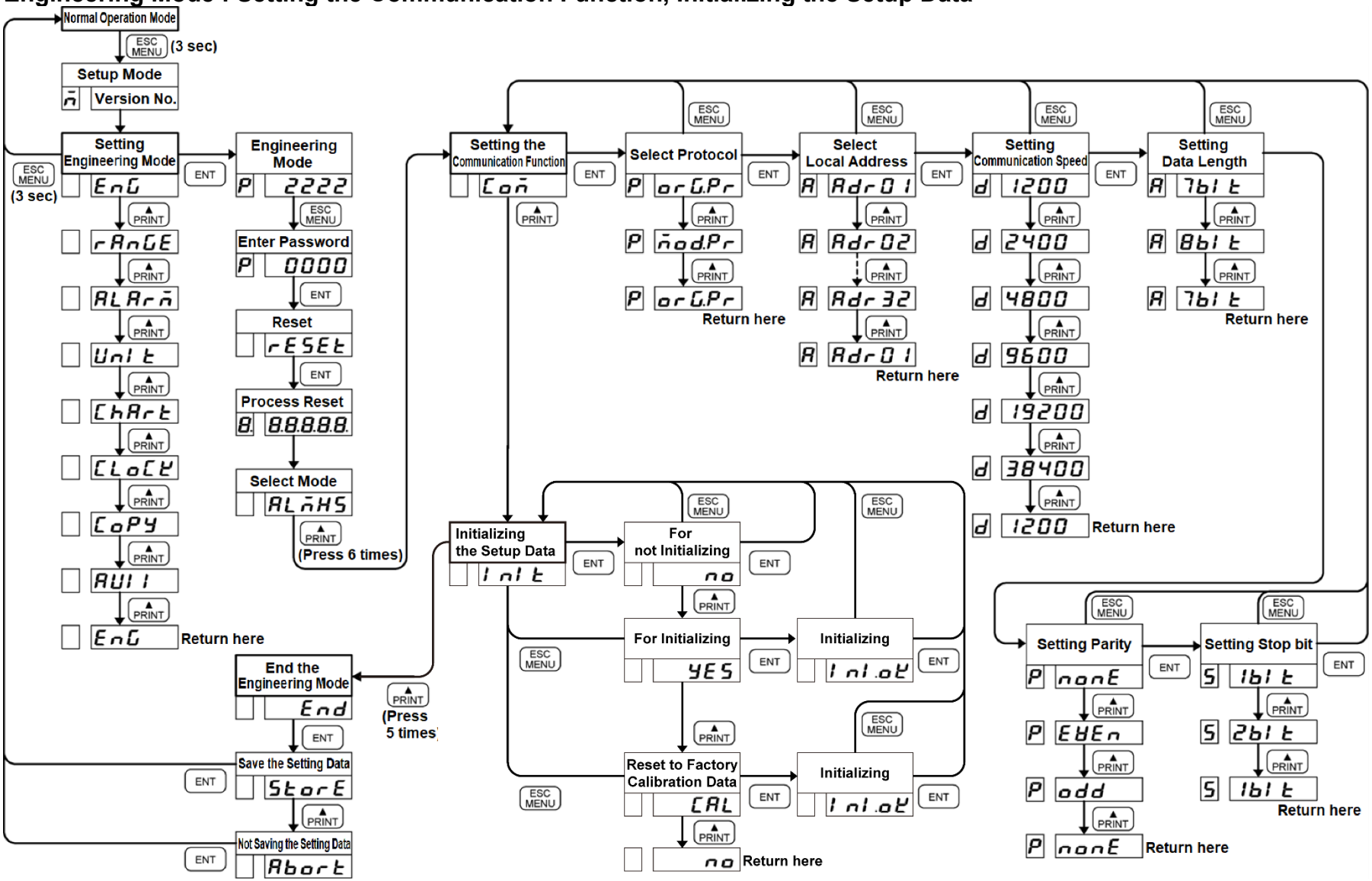

*[Reset to Factory Calibration Data CAL] is a specification added in Version 4.xx and later.

Engineering Mode : DI Functions

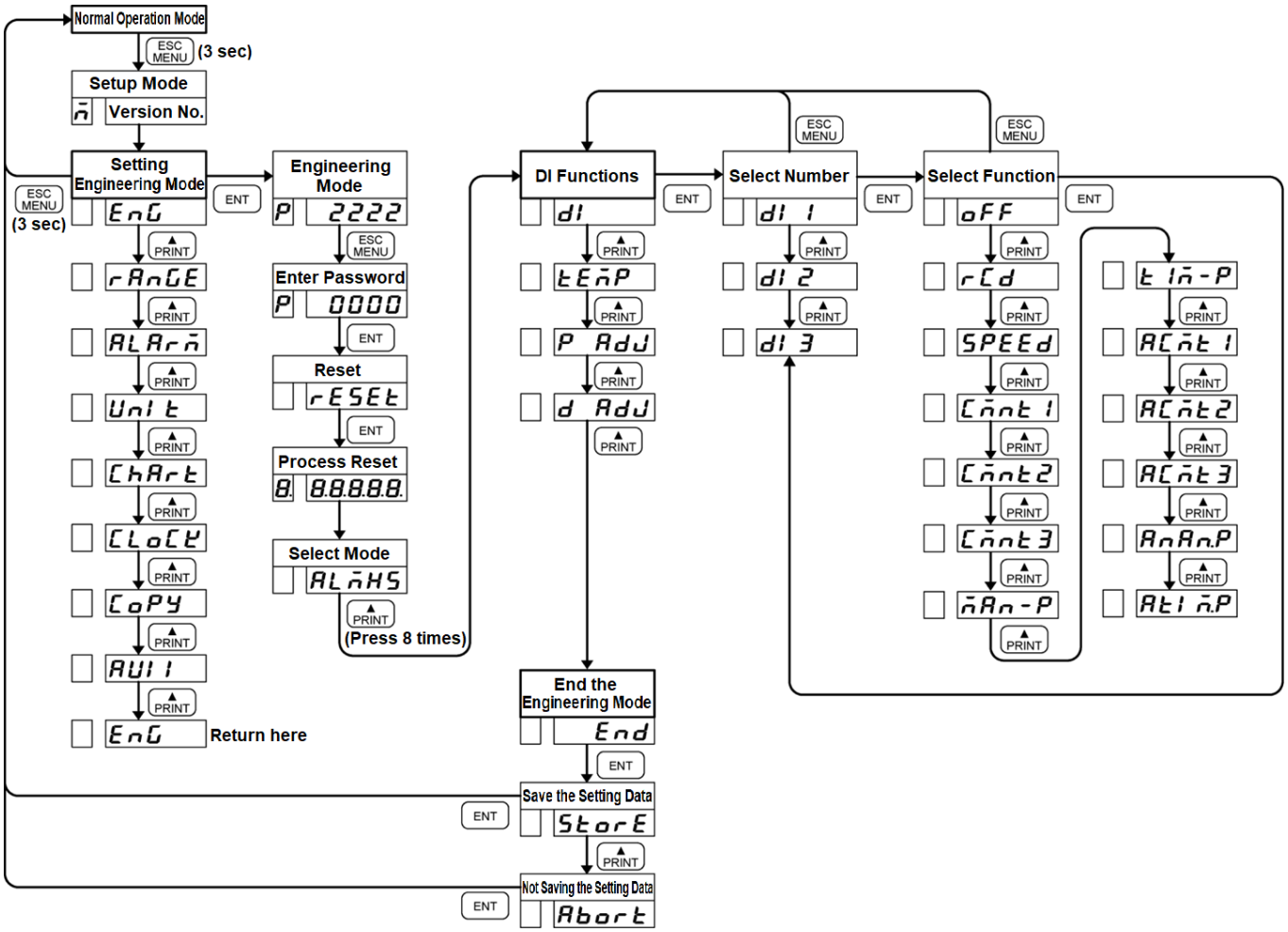

Engineering Mode : Temperature Unit Selection, Point Calibration

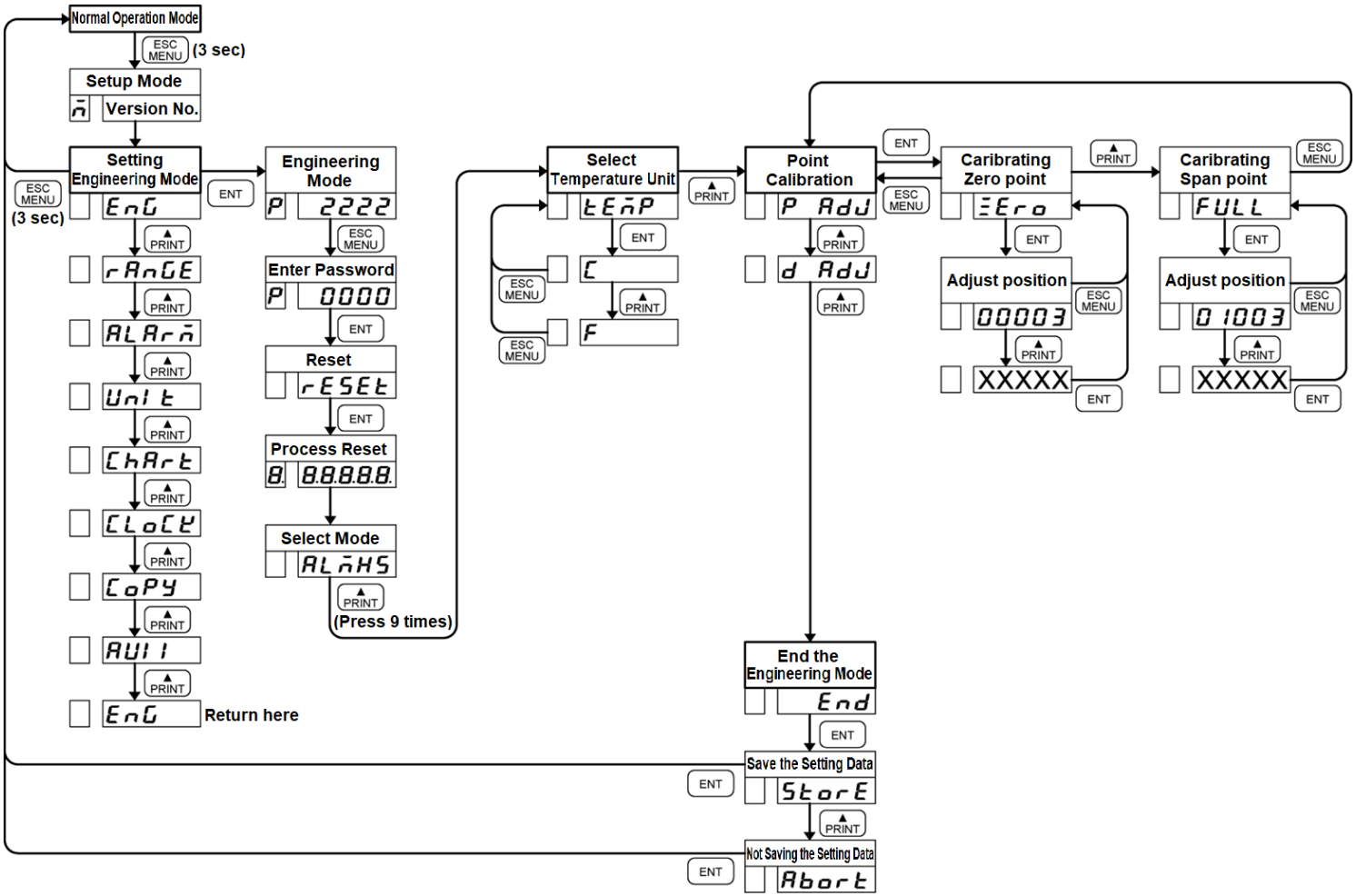

Engineering Mode : Data Calibration(Voltage)

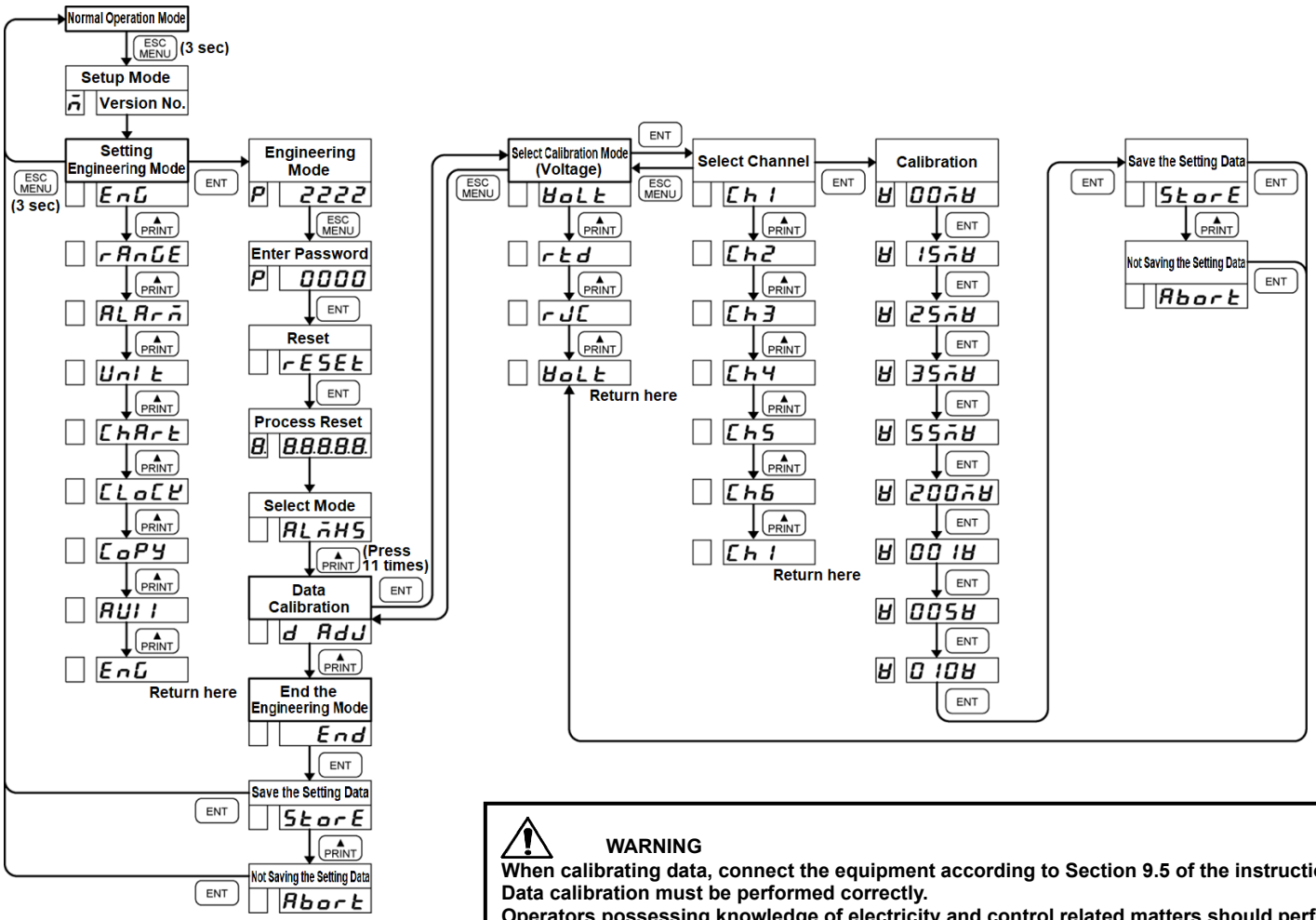

WARNING

When calibrating data, connect the equipment according to Section 9.5 of the instruction manual.
Data calibration must be performed correctly.
Operators possessing knowledge of electricity and control related matters should perform the calibration after careful reading of Sections 7.2 and 9.5 of the instruction manual.
(Shinko Technos Co., Ltd. is not liable for damages incurred if calibration is performed other than prescribed in the instruction manual.)

Engineering Mode : Data Calibration (Resistance temperature detector)

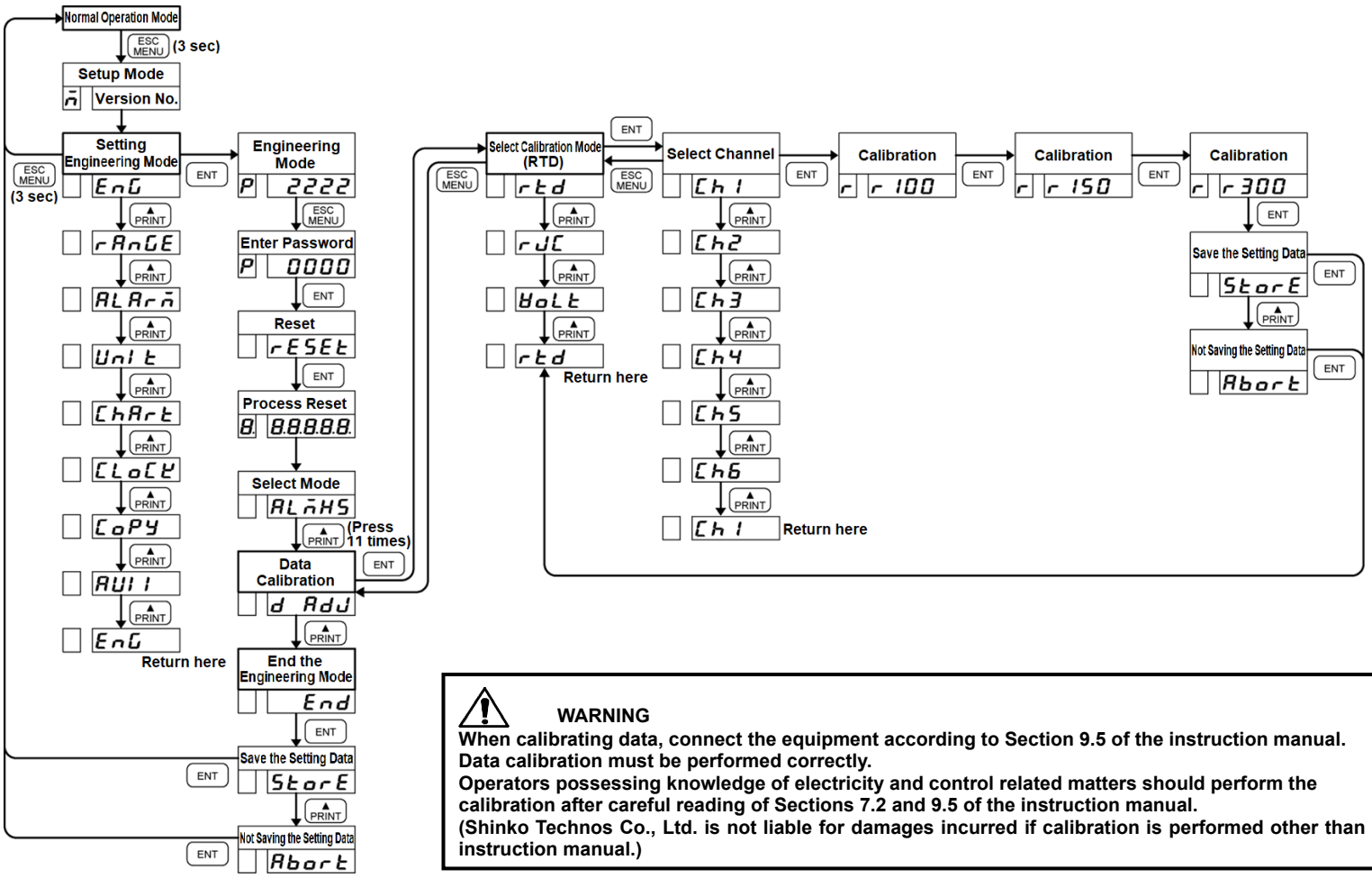

WARNING

When calibrating data, connect the equipment according to Section 9.5 of the instruction manual.
Data calibration must be performed correctly.
Operators possessing knowledge of electricity and control related matters should perform the calibration after careful reading of Sections 7.2 and 9.5 of the instruction manual.
(Shinko Technos Co., Ltd. is not liable for damages incurred if calibration is performed other than prescribed in the instruction manual.)

Engineering Mode : Data Calibration (Terminal Temperature)

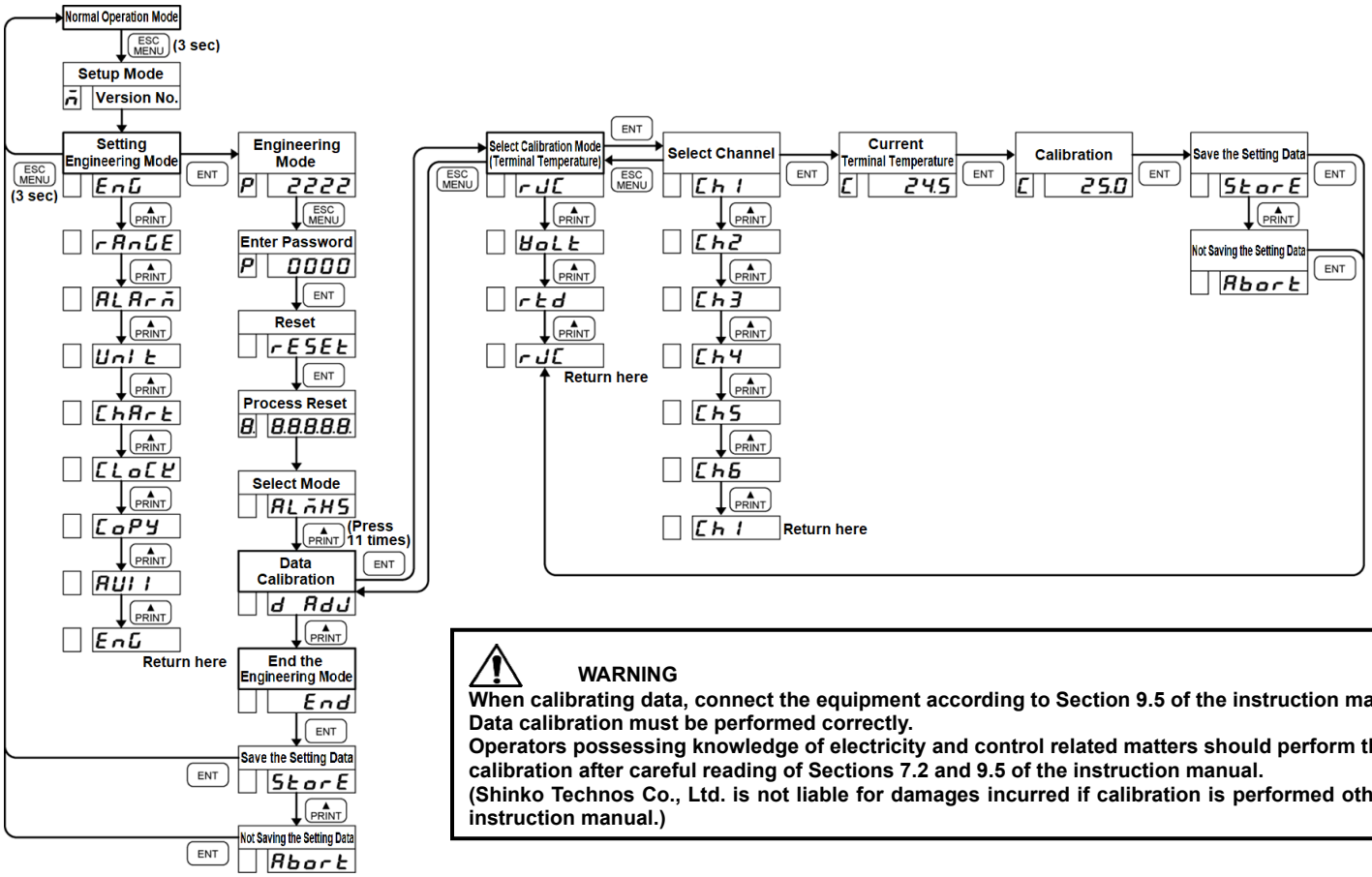

WARNING

When calibrating data, connect the equipment according to Section 9.5 of the instruction manual.
Data calibration must be performed correctly.
Operators possessing knowledge of electricity and control related matters should perform the calibration after careful reading of Sections 7.2 and 9.5 of the instruction manual.
(Shinko Technos Co., Ltd. is not liable for damages incurred if calibration is performed other than prescribed in the instruction manual.)

Default value

Setup mode

Display	Setting items	Default value	Remarks		
rAnGE	Range (all channels)	−10～10mV 0～100.0			
ALArñ	Alarm (all channels)	All levels alarm OFF, Relay OFF			
Unit	Engineering unit (all channels)	℃			
ChArt	Chart feed speed	(1)20mm/h (2)20mm/h			
CLoCK	Time	2000/01/01 00:00	The present time has been set. (Japan standard time) GMT + 09:00		
AUII	Setting other recordings				
trEnd	Dot point interval	10(sec)			
ZonE	Zone setting (all channels)	0～100(%)			
PArt	Partial compression/expansion (all channels)	OFF			
tAG	Tag printing character (all channels)	Blank up to the 7th character			
Cñnt	Comment printing word (1 to 3)	Blank up to the 16th character			

Engineering mode

Display	Setting items	Default value	Remarks		
ALñHS	Alarm hysteresis	ON(0.5%)			
b.oUt	Burnout (all channels)	OFF			
oFSEt	Channel offset (all channels)	0.0			
rJC	RJC (all channels)	Internal compensation INT			
CoLor	Dot printing color (Ch1 to Ch6)	Purple(1), Red(2), Green(3), Blue(4), Brown(5), Black(6)			
rUn	REC (recording)		Use the “REC” key		
rUn.tG	RUN/STOP trigger	INT			
tAG	Channel/Tag printing	Ch			
ALArñ	Alarm printing	OFF			
dGt.Pr	Logging printing	ON			
dGt.Pr	Logging printing reference time	00:00			
dGt.Pr	Logging printing interval	6H			
SCALE	Logging scale printing	OFF			
dI	DI function (Ch1 to Ch3)	OFF			

SHINKO TECHNOS CO., LTD.

OVERSEAS DIVISION

Head Office: 2-5-1, Senbahigashi, Minoo, Osaka, 562-0035, Japan

[URL] https://shinko-technos.co.jp/e/ Tel: +81-72-727-6100

[E-mail] overseas@shinko-technos.co.jp Fax: +81-72-727-7006

No. HR7ZE2FLOW 2025.10