Digital Indicating pH Meter

AER-102-PH

Instruction Manual

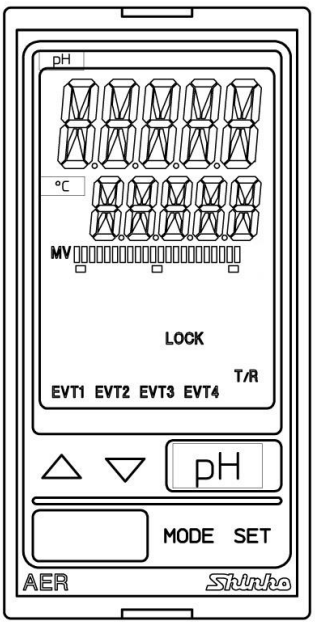

Shinko

Preface

Thank you for purchasing our AER-102-PH, Digital Indicating pH Meter.

This manual contains instructions for the mounting, functions, operations and notes when operating the AER-102-PH. To ensure safe and correct use, thoroughly read and understand this manual before using this instrument.

To prevent accidents arising from the misuse of this instrument, please ensure the operator receives this manual.

Characters Used in This Manual

Indication	-1	0	1	2	3	4	5	6	7	8	9	℃	℉
Number, ℃/℉	-1	0	1	2	3	4	5	6	7	8	9	℃	℉
Indication	A	b	c	d	E	F	G	H	I	J	K	L	M
Alphabet	A	B	C	D	E	F	G	H	I	J	K	L	M
Indication	N	o	P	Q	R	S	T	U	V	W	X	Y	Z
Alphabet	N	O	P	Q	R	S	T	U	V	W	X	Y	Z

⚠ Caution

- This instrument should be used in accordance with the specifications described in the manual. If it is not used according to the specifications, it may malfunction or cause a fire.
- Be sure to follow all of the warnings, cautions and notices. If they are not observed, serious injury or malfunction may occur.
- The contents of this instruction manual are subject to change without notice.
- Care has been taken to ensure that the contents of this instruction manual are correct, but if there are any doubts, mistakes or questions, please inform our sales department.
- This instrument is designed to be installed on an indoor control panel. If it is not, measures must be taken to ensure that the operator cannot touch power terminals or other high voltage sections.
- Any unauthorized transfer or copying of this document, in part or in whole, is prohibited.
- Shinko Technos Co., Ltd. is not liable for any damage or secondary damage(s) incurred as a result of using this product, including any indirect damage.

Safety Precautions (Be sure to read these precautions before using our products.)

The safety precautions are classified into 2 categories: “Warning” and “Caution”.
Depending on the circumstances, procedures indicated by ⚠ Caution may result in serious consequences, so be sure to follow the directions for usage.

⚠ Warning Procedures which may lead to dangerous conditions and cause death or serious injury, if not carried out properly.

⚠ Caution Procedures which may lead to dangerous conditions and cause superficial to medium injury or physical damage or may degrade or damage the product, if not carried out properly.

⚠ Warning

- To prevent an electrical shock or fire, only Shinko or other qualified service personnel may handle the inner assembly.
- To prevent an electrical shock, fire or damage to the instrument, parts replacement may only be undertaken by Shinko or other qualified service personnel.

⚠ SAFETY PRECAUTIONS

- To ensure safe and correct use, thoroughly read and understand this manual before using this instrument.
- This instrument is intended to be used for measuring equipment.
  Verify correct usage after purpose-of-use consultation with our agency or main office. (Never use this instrument for medical purposes with which human lives are involved.)
- Proper periodic maintenance is also required.
- This instrument must be used under the conditions and environment described in this manual. Shinko Technos Co., Ltd. does not accept liability for any injury, loss of life or damage occurring due to the instrument being used under conditions not otherwise stated in this manual.

Warning on Model Label

⚠ Caution

Failure to handle this instrument properly may result in minor or moderate injury or property damage due to fire, malfunction, malfunction, or electric shock. Please read this manual before using the product to ensure that you fully understand the product.

⚠ Caution with Respect to Export Trade Control Ordinance

To avoid this instrument from being used as a component in, or as being utilized in the manufacture of weapons of mass destruction (i.e. military applications, military equipment, etc.), please investigate the end users and the final use of this instrument. In the case of resale, ensure that this instrument is not illegally exported.

1. Installation Precautions

⚠ Caution

This instrument is intended to be used under the following environmental conditions (IEC61010-1): Overvoltage category Ⅱ, Pollution degree 2
Ensure the mounting location corresponds to the following conditions:

- A minimum of dust, and an absence of corrosive gases
- No flammable, explosive gases
- No mechanical vibrations or shocks
- No exposure to direct sunlight, an ambient temperature of 0 to 50℃ (32 to 122℉) that does not change rapidly, and no icing
- An ambient non-condensing humidity of 35 to 85 %RH
- No large capacity electromagnetic switches or cables through which large current is flowing.
- No water, oil, chemicals or the vapors of these substances can come into direct contact with the unit.
- If the AER-102-PH is mounted through the face of a control panel, the ambient temperature of the unit – not the ambient temperature of the control panel – must be kept under 50℃. Otherwise the life of electronic parts (especially electrolytic capacitors) of the unit will be shortened.

Note: **Do not install this instrument on or near flammable material even though the case of this instrument is made of flame-resistant resin.**

2. Wiring Precautions

⚠ Caution

- Do not leave wire remnants in the instrument, as they could cause a fire or a malfunction.
- Use a solderless terminal with an insulation sleeve in which the M3 screw fits when wiring the AER-102-PH.
- The terminal block of this instrument is designed to be wired from the left side. The lead wire must be inserted from the left side of the terminal, and fastened with the terminal screw.
- Tighten the terminal screw using the specified torque. If excessive force is applied to the screw when tightening, the terminal screw or the case may be damaged.
- This instrument does not have a built-in power switch, circuit breaker and fuse. It is necessary to install a power switch, circuit breaker and fuse near the instrument. (Recommended fuse: Time-lag fuse, rated voltage 250 V AC, rated current 2 A)
- For a 24 V AC/DC power source, do not confuse polarity when using direct current (DC).
- Be sure to connect the ground terminal to earth for safety (D-class grounding). Keep the grounding of this unit separate from other electrical devices, such as motors.
- Do not apply a commercial power source to the sensor which is connected to the input terminal nor allow the power source to come into contact with the sensor.
- Use the pH Combined Electrode Sensor in accordance with the sensor input specifications of the AER-102-PH.
- Keep the input wires and power lines separate.

Note about the pH Combined Electrode Sensor Cable

The pH Combined Electrode Sensor cable is a highly-insulated (electrical) cable. Please handle it with utmost care as follows.

- The sensor cable should be wired directly to the terminal block.
- Do not allow terminals and socket of the pH Combined Electrode Sensor cable to come in contact with moisture or oil of any kind. Likewise, ensure fingers are clean, otherwise the insulation will deteriorate, resulting in unstable indication.
  Be sure to keep the cable dry and clean at all times.
  If the cable is stained, clean it with alcohol, and dry it completely.
- For calibration or electrode checking/replacement, the pH Combined Electrode Sensor cable should be wired with sufficient length.
- Keep the pH Combined Electrode Sensor cable and junction cable away from electrical devices, such as motors or their power lines from which inductive interference emanates.

Connection

The pH Combined Electrode Sensor cable has the following terminals:

Code	Terminal
G	Glass electrode terminal
R	Reference electrode terminal
T, T	Temperature compensation electrode terminals (Cu500)
A, B	Temperature compensation electrode terminals [Pt100 (2-wire), Pt1000]
A, B, B	Temperature compensation electrode terminals [Pt100 (3-wire)]
E	Shield wire terminal

For the pH Combined Electrode Sensor with No Temperature Compensation, T, T or A, B, B cables are not available.
E cables are available depending on the sensor type.
During operation, the pH/Temperature Display may become abnormal or unstable due to inductive interference or noise. In this case, try [Grounding of shield wire terminal (E) (P.70)].

3. Operation and Maintenance Precautions

⚠ Caution

- Do not touch live terminals. This may cause an electrical shock or problems in operation.
- Turn the power supply to the instrument OFF when retightening the terminal or cleaning.
  Working on or touching the terminal with the power switched ON may result in severe injury or death due to electrical shock.
- Use a soft, dry cloth when cleaning the instrument.
  (Alcohol based substances may tarnish or deface the unit.)
- As the display section is vulnerable, be careful not to put pressure on, scratch or strike it with a hard object.

4. Compliance with Safety Standards

⚠ Caution

- Always install the recommended fuse described in this manual externally.
- If the instrument is used in a manner not specified by the manufacturer, the protection provided by the instrument may be impaired.
- Use a device with reinforced insulation or double insulation for the external circuit connected to this product.

Contents

Page

1. Model 8
   1.1 Model 8
   1.2 How to Read the Model Label 8
2. Names and Functions of Sections 9
3. Mounting to the Control Panel 10
   3.1 Site Selection 10
   3.2 External Dimensions (Scale: mm) 10
   3.3 Panel Cutout (Scale: mm) 11
   3.4 Mounting and Removal 12
4. Wiring 13
   4.1 Lead Wire Solderless Terminal 14
   4.2 Terminal Arrangement 15
5. Outline of Key Operation and Setting Groups 16
   5.1 Outline of Key Operation 16
   5.2 Setting Groups 16
6. Key Operation Flowchart 18
7. Setup 21
   7.1 Turn the Power Supply to the AER-102-PH ON. 21
   7.2 pH Input Group 22
   7.3 Temperature Input Group 23
   7.4 EVT1 Action Group 25
   7.5 EVT2 Action Group 33
   7.6 EVT3 Action Group 33
   7.7 EVT4 Action Group 33
   7.8 Basic Function Group 34
   7.9 Zero/Slope Indication Group 41
8. Calibration 42
   8.1 pH Calibration Mode 42
      8.1.1 Automatic Calibration 42
      8.1.2 Manual Calibration 43
      8.1.3 Error Code during pH Calibration 45
   8.2 Temperature Calibration Mode 46
   8.3 Transmission Output 1 Adjustment Mode 47
   8.4 Transmission Output 2 Adjustment Mode 48
9. Measurement 49
   9.1 Starting Measurement 49
   9.2 EVT1 to EVT4 Outputs 50
   9.3 Error Output 52
   9.4 Fail Output 52
   9.5 Cleansing Output 52
   9.6 Manual Cleansing Mode 53
   9.7 pH Input Error Alarm 54
   9.8 Cycle Automatic Variable Function 55

9.9 Error Code during Measurement 56
9.10 Setting EVT1 to EVT4 Values 56
9.11 Transmission Output 1 and 2 57
9.12 pH Fluctuation Alarm Output 58
10. Specifications 59
10.1 Standard Specifications 59
10.2 Optional Specifications 67
11. Troubleshooting 68
11.1 Indication 68
11.2 Key Operation 70
12. Character Tables 71
12.1 Setting Group List 71
12.2 Temperature Calibration Mode 71
12.3 pH Calibration Mode (for Manual calibration) 71
12.4 Transmission Output 1 Adjustment Mode 71
12.5 Transmission Output 2 Adjustment Mode 71
12.6 Simple Setting Mode 72
12.7 pH Input Group 72
12.8 Temperature Input Group 73
12.9 EVT1 Action Group 73
12.10 EVT2 Action Group 76
12.11 EVT3 Action Group 78
12.12 EVT4 Action Group 80
12.13 Basic Function Group 83
12.14 Zero/Slope Indication Group 86
12.15 Error Code List 87

1. Model

1.1 Model

AER-10	2-	PH		,□□□			
Input Points	2				2 points		
Input		PH			pH Combined Electrode Sensor	Pt spec (*1)	Pt1000
							Pt100
						Cu spec (*1)	Cu500/25℃
Power Supply Voltage					100 to 240 V AC (standard)		
			1		24 V AC/DC(*2)		
Option				C5	Serial communication RS-485		
				EVT3	EVT3, EVT4 outputs (Contact output 3, 4)		
				TA2	Transmission output 2 (*3)		

(*1) This input temperature specification was specified at the time of ordering.

(*2) Power supply voltage 100 to 240 V AC is standard.
When ordering 24 V AC/DC, enter “1” in Power supply voltage, after ‘PH’.

(*3) If Transmission output 2 (TA2 option) is ordered, the EVT1 cannot be added.

1.2 How to Read the Model Label

The model label is attached to the left side of the case.

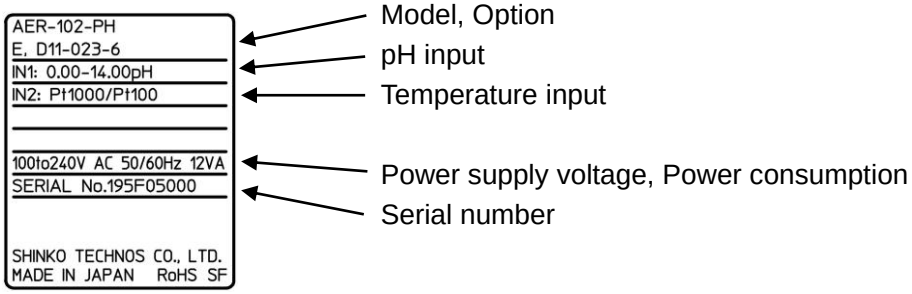

(Fig. 1.2-1)

2. Names and Functions of Sections

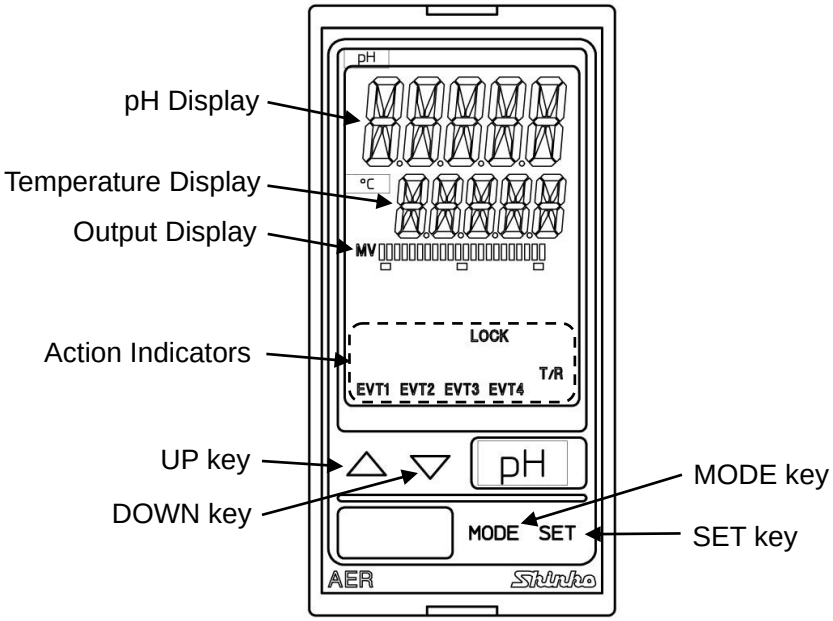

(Fig. 2-1)

Displays

pH Display	pH or characters in setting mode are indicated in red/green/orange. Indications differ depending on the selections in [Backlight selection (p.37)] and [pH color (p.38)].
Temperature Display	Temperature or values in setting mode are indicated in green. Indications differ depending on the selections in [Backlight selection (p.37)].
Output Display	Backlight green The bar graph lights up corresponding to the Transmission output. Indications differ depending on the selections in [Bar graph indication (p.39)].

Action Indicators: Backlight orange

EVT1	Lights up when EVT1 output (Contact output 1) is ON.
EVT2	Lights up when EVT2 output (Contact output 2) is ON.
EVT3	Lights up when EVT3 output (Contact output 3) (EVT3 option) is ON.
EVT4	Lights up when EVT4 output (Contact output 4) (EVT3 option) is ON.
T/R	Lights up during Serial communication (C5 option) TX output (transmitting).
LOCK	Lights up when Lock 1, Lock 2 or Lock 3 is selected.

Keys

△	**UP key**	Increases the numeric value.
▽	**DOWN key**	Decreases the numeric value.
MODE	**MODE key**	Selects a group.
SET	**SET key**	Switches the setting modes, and registers the set value.

3. Mounting to the Control Panel

3.1 Site Selection

> **⚠ Caution**
>
> Use within the following temperature and humidity ranges:
> Temperature: 0 to 50℃ (32 to 122℉) (No icing)
> Humidity: 35 to 85 %RH (Non-condensing)
>
> If AER-102-PH is mounted through the face of a control panel, the ambient temperature of the unit – not the ambient temperature of the control panel – must be kept under 50℃, otherwise the life of electronic parts (especially electrolytic capacitors) of the unit will be shortened.

This instrument is intended to be used under the following environmental conditions (IEC61010-1): Overvoltage category Ⅱ, Pollution degree 2

Ensure the mounting location corresponds to the following conditions:

- A minimum of dust, and an absence of corrosive gases
- No flammable, explosive gases
- No mechanical vibrations or shocks
- No exposure to direct sunlight, an ambient temperature of 0 to 50℃ (32 to 122℉) that does not change rapidly
- An ambient non-condensing humidity of 35 to 85 %RH
- No large capacity electromagnetic switches or cables through which large current is flowing
- No water, oil, chemicals or the vapors of these substances can come into direct contact with the unit

3.2 External Dimensions (Scale: mm)

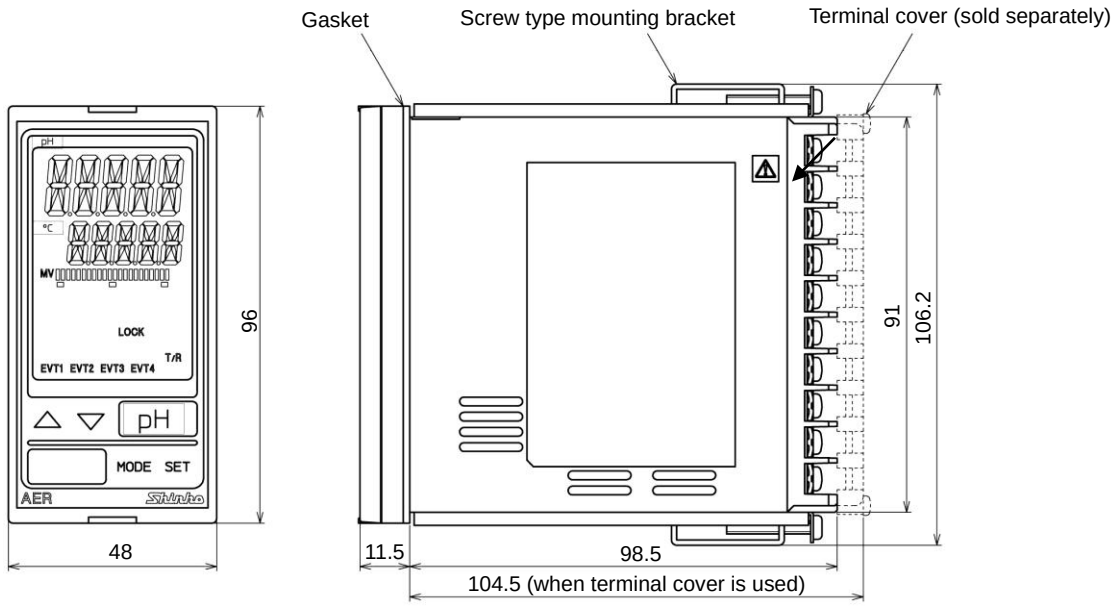

(Fig. 3.2-1)

3.3 Panel Cutout (Scale: mm)

Caution

If horizontal close mounting is used for the unit, IP66 specification (Drip-proof/ Dust-proof) may be compromised, and all warranties will be invalidated.

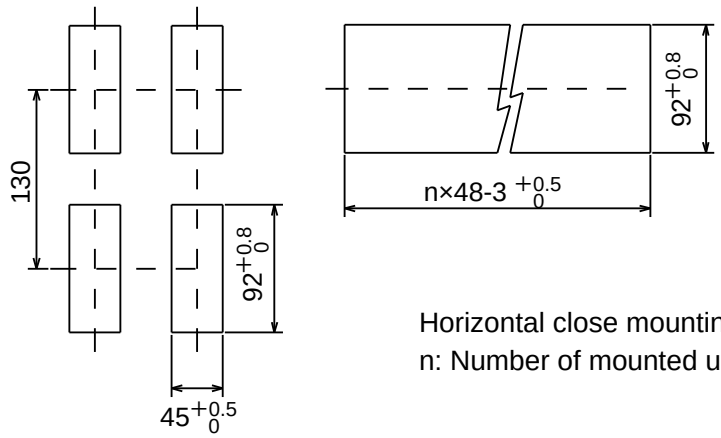

Horizontal close mounting
n: Number of mounted units

(Fig. 3.3-1)

3.4 Mounting and Removal

⚠ Caution

As the case is made of resin, do not use excessive force while screwing in the mounting bracket, or the case or mounting brackets could be damaged. The tightening torque should be 0.12 N•m.

How to mount the unit

Mount the unit vertically to the flat, rigid panel to ensure it adheres to the Drip-proof/ Dust-proof specification (IP66).

Mountable panel thickness: 1 to 8 mm

(1) Insert the unit from the front side of the panel.

(2) Attach the mounting brackets by the holes at the top and bottom of the case, and secure the unit in place with the screws.

How to remove the unit

(1) Turn the power to the unit OFF, and disconnect all wires before removing the unit.

(2) Loosen the screws of the mounting brackets, and remove the mounting brackets.

(3) Pull the unit out from the front of the panel.

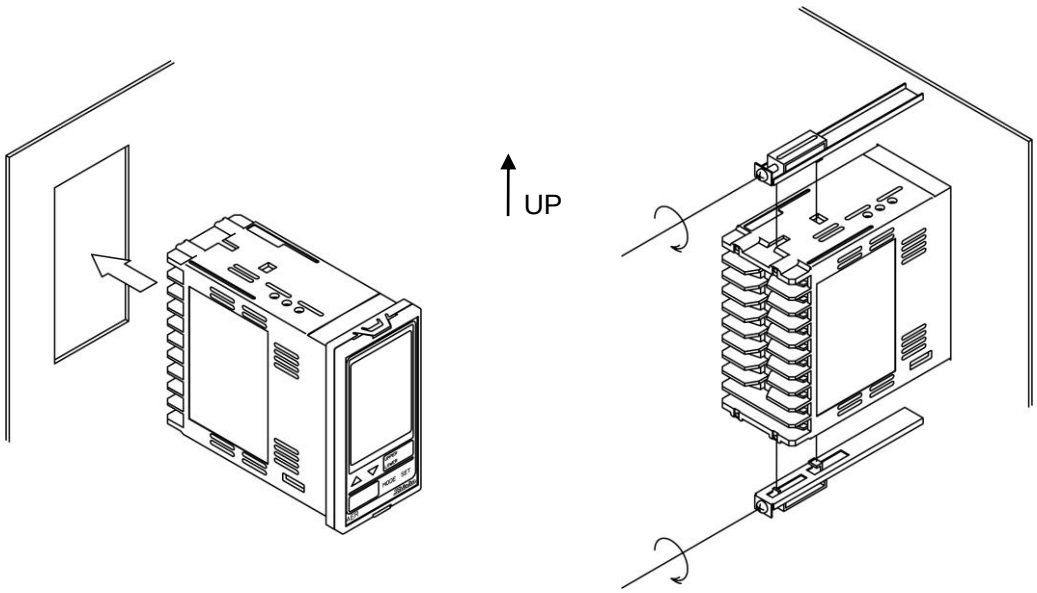

(Fig. 3.4-1)

4. Wiring

⚠ Warning

Turn the power supply to the instrument off before wiring or checking. Working on or touching the terminal with the power switched on may result in severe injury or death due to electrical shock.

⚠ Caution

- Do not leave wire remnants in the instrument, as they could cause a fire or a malfunction.
- Use a solderless terminal with an insulation sleeve in which the M3 screw fits when wiring the AER-102-PH.
- The terminal block of this instrument is designed to be wired from the left side. The lead wire must be inserted from the left side of the terminal, and fastened with the terminal screw.
- Tighten the terminal screw using the specified torque. If excessive force is applied to the screw when tightening, the terminal screw may be damaged.
- This instrument does not have a built-in power switch, circuit breaker and fuse. It is necessary to install a power switch, circuit breaker and fuse near the instrument. (Recommended fuse: Time-lag fuse, rated voltage 250 V AC, rated current 2 A)
- For a 24 V AC/DC power source, do not confuse polarity when using direct current (DC).
- Be sure to connect the ground terminal to earth for safety (D-class grounding). Keep the grounding of this unit separate from other electrical devices, such as motors.
- Do not apply a commercial power source to the sensor which is connected to the input terminal nor allow the power source to come into contact with the sensor.
- Use the pH Combined Electrode Sensor in accordance with the sensor input specifications of this unit.
- Keep the input wires and power line separate.

Note about the pH Combined Electrode Sensor Cable

The pH Combined Electrode Sensor cable is a highly-insulated (electrical) cable. Please handle it with utmost care as follows.

- The sensor cable should be wired directly to the terminal block.
- Do not allow terminals and socket of the pH Combined Electrode Sensor cable to come in contact with moisture or oil of any kind. Likewise, ensure fingers are clean, otherwise the insulation will deteriorate, resulting in unstable indication.

  Be sure to keep the cable dry and clean at all times.

  If the cable is stained, clean it with alcohol, and dry it completely.
- For calibration or electrode checking/replacement, the pH Combined Electrode Sensor cable should be wired with sufficient length.
- Keep the pH Combined Electrode Sensor cable and junction cable away from electrical devices, such as motors or their power lines from which inductive interference emanates.

Connection

The pH Combined Electrode Sensor cable has the following terminals:

Code	Terminal
G	Glass electrode terminal
R	Reference electrode terminal
T, T	Temperature compensation electrode terminals (Cu500)
A, B	Temperature compensation electrode terminals [Pt100 (2-wire), Pt1000]
A, B, B	Temperature compensation electrode terminals [Pt100 (3-wire)]
E	Shield wire terminal

For the pH Combined Electrode Sensor with No Temperature Compensation, T, T or A, B, B cables are not available.

E cables are available depending on the sensor type.

During operation, the pH/Temperature Display may become abnormal or unstable due to inductive interference or noise. In this case, try [Grounding of shield wire terminal (E) (P.70)].

4.1 Lead Wire Solderless Terminal

Use a solderless terminal with an insulation sleeve in which an M3 screw fits as follows. The tightening torque should be 0.63 N•m.

Solderless Terminal	Manufacturer	Model	Tightening Torque
Y-type	NICHIFU TERMINAL INDUSTRIES CO., LTD.	TMEX1.25Y-3	0.63 N•m
	J.S.T.MFG.CO.,LTD.	VD1.25-B3A	
Ring-type	NICHIFU TERMINAL INDUSTRIES CO., LTD.	TMEX1.25-3	
	J.S.T.MFG.CO.,LTD.	V1.25-3	

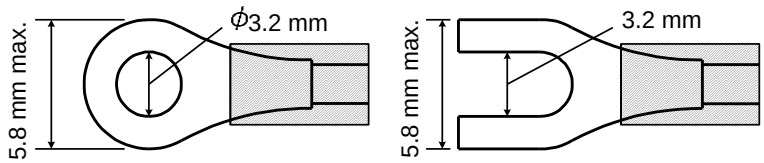

(Fig. 4.1-1)

4.2 Terminal Arrangement

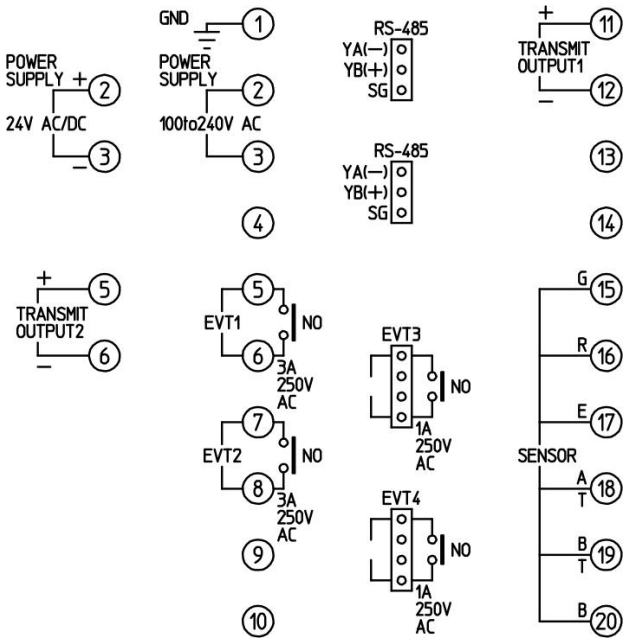

(Fig. 4.2-1)

GND	Ground
POWER SUPPLY	100 to 240 V AC or 24 V AC/DC (when 1 is added after the model) **For 24 V DC, ensure polarity is correct.**
EVT1	EVT1 output (Contact output 1)
EVT2	EVT2 output (Contact output 2)
TRANSMIT OUTPUT1	Transmission output 1
TRANSMIT OUTPUT2	Transmission output 2 (TA2 option)
G, R	Electrode sensor
E	Shield wire
T, T	Temperature compensation sensor (Cu500)
A, B	Temperature compensation sensor [Pt100 (2-wire), Pt1000]
A, B, B	Temperature compensation sensor [Pt100 (3-wire)]
RS-485	Serial communication (C5 option) 2 connectors are wired internally. Use the included wire harnesses C5J and C0J.
EVT3	EVT3 output (Contact output 3) (EVT3 option) Use the included wire harness HBJ.
EVT4	EVT4 output (Contact output 4) (EVT3 option) Use the included wire harness HBJ.

5. Outline of Key Operation and Setting Groups

5.1 Outline of Key Operation

There are 2 setting modes: Simple Setting mode, and Group Selection mode in which setting items are divided into groups.

To enter Simple Setting mode, press the SET key in pH/Temperature Display Mode, or Cleansing Output Mode.

To enter Group Selection mode, press the MODE key in pH/Temperature Display Mode, or Cleansing Output Mode.

Select a group with the MODE key, and press the SET key. The unit enters each setting item.

To set each item, use the △ or ▽ key, and register the set value with the SET key.

5.2 Setting Groups

Setting groups are described in the next page.

[About Each Mode and Setting Items]

(*1) In pH/Temperature Display mode, or Cleansing Output mode, measurement starts, indicating the item selected in [Backlight selection (p.37)] in the Basic Function group.
If power is turned ON again, the last mode at power OFF (pH/Temperature Display mode, or Cleansing Output mode) will resume.

(*2) If cLEO (Cleansing output) is selected in [EVT1 type to EVT4 type] in the EVT1 to EVT4 Action groups, the unit can enter Manual cleansing mode.
After cleansing action is complete, the unit automatically reverts to Cleansing Output mode.

(*3) If NonE (No temperature compensation) is selected in [Electrode RTD (p.24)] in the Temperature Input group, the unit will not move to Temperature Calibration mode.

(*4) Available when Transmission output 2 (TA2 option) is ordered.

(*5) Not available if Transmission output 2 (TA2 option) is ordered.

(*6) Available when the EVT3, EVT4 outputs (EVT3 option) is ordered.

[Key Operation]

- △+▽ (3 sec): Press and hold the △ key and ▽ key (in that order) together for 3 seconds. The unit will proceed to Manual Cleansing mode.
- △+MODE (3 sec): Press and hold the △ key and MODE key (in that order) together for 3 seconds. The unit will proceed to Temperature Calibration mode.
- ▽+MODE (3 sec): Press and hold the ▽ key and MODE key (in that order) together for 3 seconds. The unit will proceed to pH Calibration mode.
- △+SET (3 sec): Press the △ and SET key (in that order) together for 3 seconds. The unit will proceed to Transmission output 1 Zero adjustment mode.
- ▽+SET (3 sec): Press the ▽ and SET key (in that order) together for 3 seconds. The unit will proceed to Transmission output 2 Zero adjustment mode.
- MODE or SET: Press the MODE or SET key. The unit will proceed to the next setting item, illustrated by an arrow.
- SET or MODE: Press the SET or MODE key until the desired setting mode appears.
- To revert to pH/Temperature Display Mode, or Cleansing Output Mode, press and hold the MODE key for 3 seconds while in any mode.

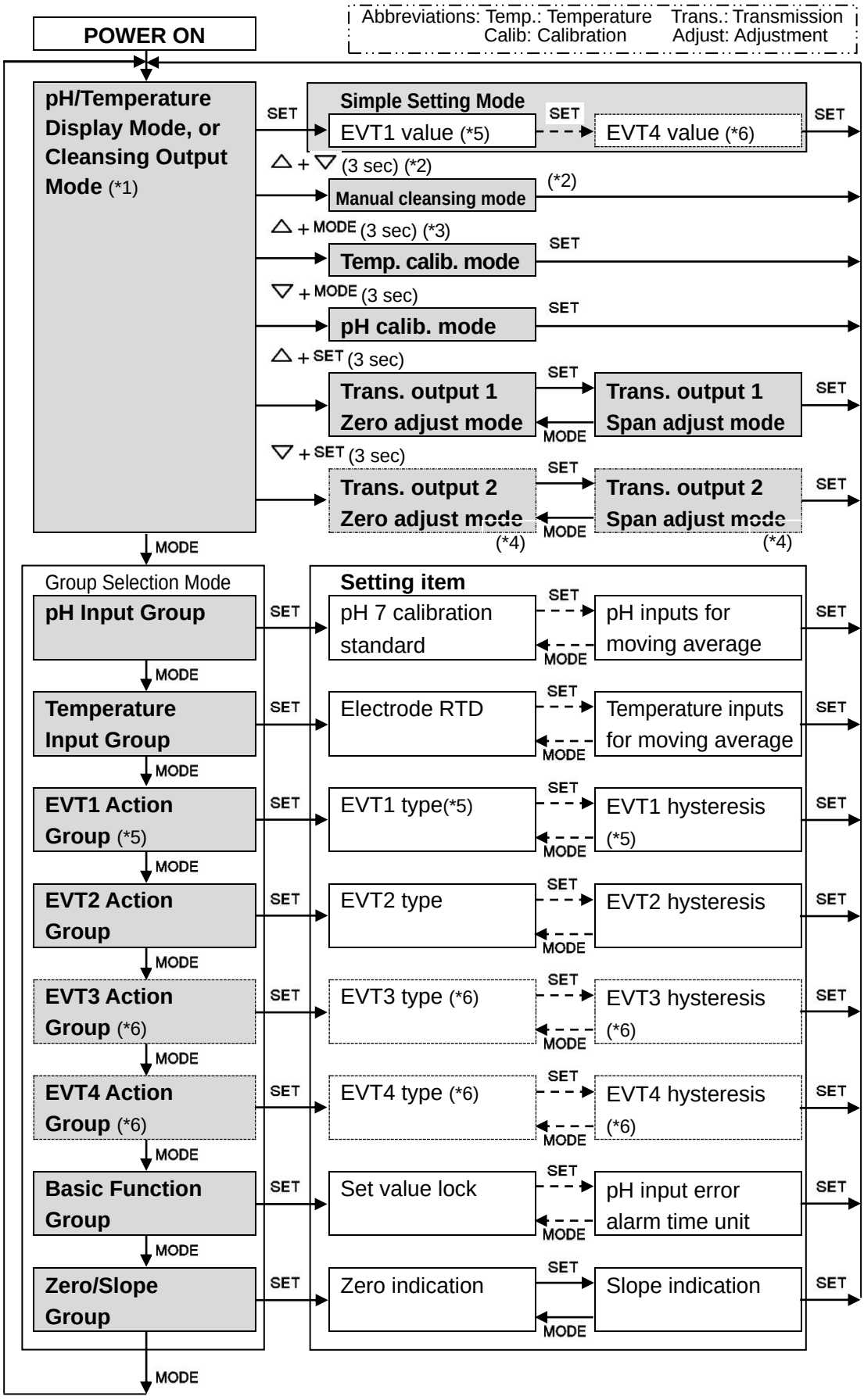
Abbreviations: Temp.: Temperature Trans.: Transmission
Calib: Calibration Adjust: Adjustment
POWER ON
pH/Temperature Display Mode, or Cleansing Output Mode (*1)
SET
Simple Setting Mode
EVT1 value (*5)
SET
EVT4 value (*6)
SET
△ + ▽ (3 sec) (*2)
Manual cleansing mode
(*2)
△ + MODE (3 sec) (*3)
Temp. calib. mode
SET
▽ + MODE (3 sec)
pH calib. mode
SET
△ + SET (3 sec)
Trans. output 1 Zero adjust mode
SET
Trans. output 1 Span adjust mode
SET
MODE
▽ + SET (3 sec)
Trans. output 2 Zero adjust mode
(*4)
SET
Trans. output 2 Span adjust mode
(*4)
SET
MODE
MODE
Group Selection Mode
Setting item
pH Input Group
SET
pH 7 calibration standard
SET
pH inputs for moving average
SET
MODE
MODE
Temperature Input Group
SET
Electrode RTD
SET
Temperature inputs for moving average
SET
MODE
MODE
EVT1 Action Group (*5)
SET
EVT1 type(*5)
SET
EVT1 hysteresis (*5)
SET
MODE
MODE
EVT2 Action Group
SET
EVT2 type
SET
EVT2 hysteresis
SET
MODE
MODE
EVT3 Action Group (*6)
SET
EVT3 type (*6)
SET
EVT3 hysteresis (*6)
SET
MODE
MODE
EVT4 Action Group (*6)
SET
EVT4 type (*6)
SET
EVT4 hysteresis (*6)
SET
MODE
MODE
Basic Function Group
SET
Set value lock
SET
pH input error alarm time unit
SET
MODE
MODE
Zero/Slope Group
SET
Zero indication
SET
Slope indication
SET
MODE
MODE

6. Key Operation Flowchart

Abbreviations: Temp.: Temperature Calib: Calibration
Trans.: Transmission Adjust: Adjustment

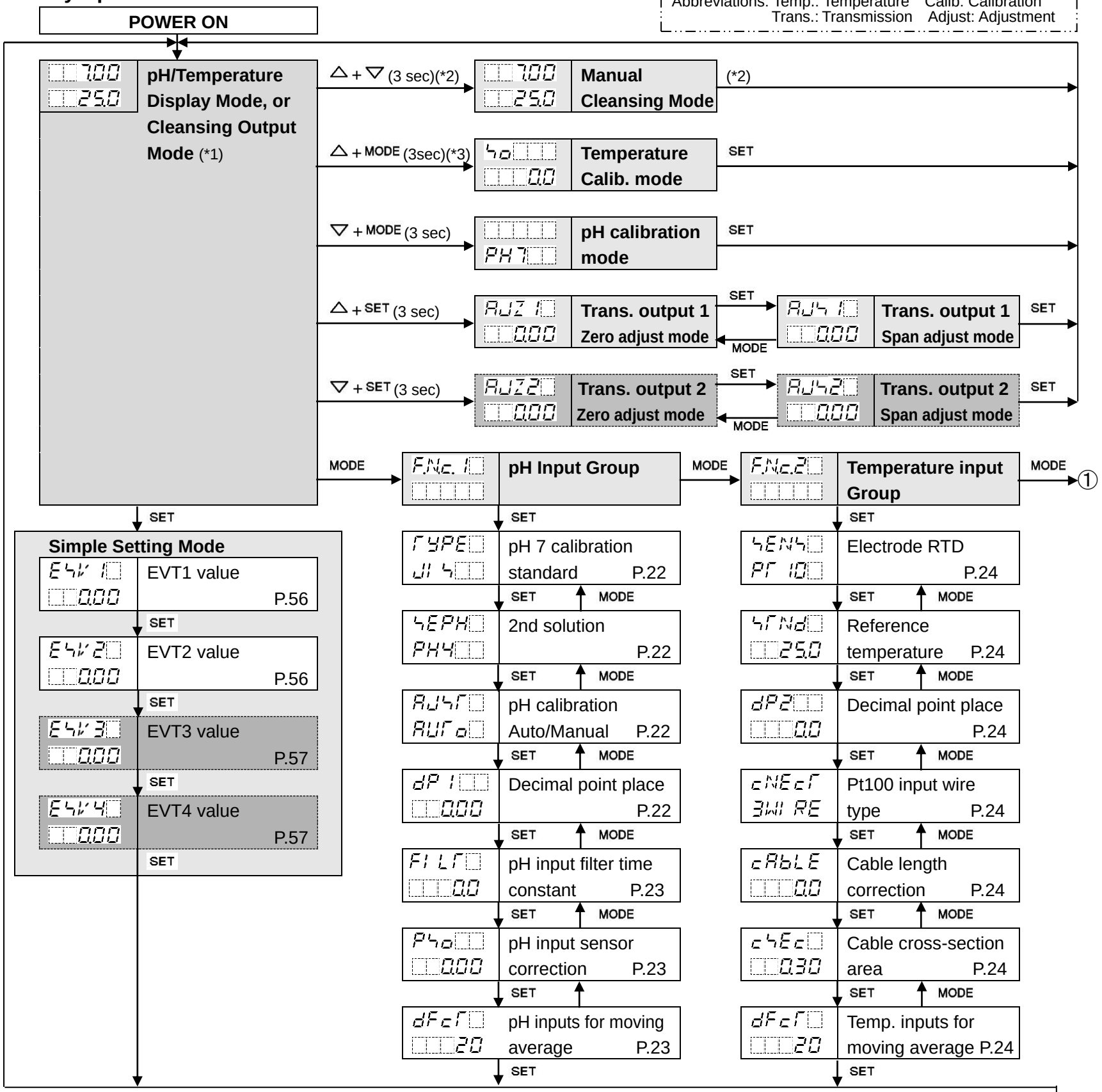

[About Setting Items]

EVT1 value P.56	• **Upper left**: pH Display: Indicates the setting item characters. • **Lower left**: Temperature Display: Indicates the factory default. • **Right side**: Indicates the setting item and reference page.
EVT3 value P.57	Setting item in shaded section will be displayed only when the corresponding option is ordered.

[About Each Mode and Setting Items]

(*1) In pH/Temperature Display Mode or Cleansing Output Mode, measurement starts, indicating the item selected in [Backlight selection (p.37)] in the Basic Function group. If the power is turned ON again, the last mode at power OFF (pH/Temperature Display Mode, or Cleansing Output Mode) will resume.

(*2) If cLEO (Cleansing output) is selected in [EVT1 type to EVT4 type] in the EVT1 to EVT4 Action groups, the unit can enter Manual cleansing mode. After the Cleansing action is complete, the unit automatically reverts to Cleansing Output Mode.

(*3) If NoNE (No temperature compensation) is selected in [Electrode RTD (p.24)] in the Temperature Input group, the unit does not move to Temperature Calibration mode.

Abbreviation: H/L High/Low limits

EVT1 Action Group → MODE → **EVT2 Action Group** → MODE → **EVT3 Action Group** → MODE → ③

SET

EVT1 type P.25

SET ↑ MODE

EVT1 value P.27

SET ↑ MODE

EVT1 proportional band P.27

SET ↑ MODE

EVT1 reset P.27

SET ↑ MODE

EVT1 hysteresis type P.28

SET ↑ MODE

EVT1 ON side P.28

SET ↑ MODE

EVT1 OFF side P.28

SET ↑ MODE

EVT1 ON delay time P.28

SET ↑ MODE

EVT1 OFF delay time P.29

SET ↑ MODE

EVT1 proportional cycle P.29

SET ↑ MODE

EVT1 output high limit P.29

SET ↑ MODE

EVT1 output low limit P.29

SET ↑ MODE

Output ON time when EVT1 output ON P.29

SET ↑ MODE

Output OFF time when EVT1 output ON P.30

SET ↑ MODE

EVT1 pH input error alarm EVT□ type P.30

SET

MODE

EVT1 pH input error alarm band when EVT□ output ON P.30

SET ↑ MODE

EVT1 pH input error alarm time when EVT□ output ON P.31

SET ↑ MODE

EVT1 pH input error alarm band when EVT□ output OFF P.31

SET ↑ MODE

EVT1 pH input error alarm time when EVT□ output OFF P.31

SET ↑ MODE

EVT1 cycle variable range P.31

SET ↑ MODE

EVT1 cycle extended time P.31

SET ↑ MODE

EVT1 pH fluctuation alarm time P.32

SET ↑ MODE

EVT1 pH fluctuation alarm band P.32

SET ↑ MODE

EVT1 H/L independent lower side band P.32

SET ↑ MODE

EVT1 H/L independent upper side band P.32

SET ↑ MODE

EVT1 hysteresis P.32

SET

Setting items: Same as item settings for EVT1 action group. For EVT2, read EVT1 column and substitute EVT1 with EVT2.
(e.g.) EVT 1F → EVT 2F

SET

Setting items: Same as item settings for EVT1 action group. For EVT3, read EVT1 column and substitute EVT1 with EVT3.
(e.g.) EVT 1F → EVT 3F

SET

① ② ④

[About Key Operation]

- △ + ▽ (3 sec): Press and hold the △ and ▽ keys (in that order) together for 3 sec. The unit will enter Manual cleansing mode.
- △ + MODE (3 sec): Press and hold the △ and MODE keys (in that order) together for 3 sec. The unit will enter Temperature Calibration mode.
- ▽ + MODE (3sec): Press and hold the ▽ and MODE keys (in that order) together for 3 sec. The unit will enter pH Calibration mode.
- △ + SET (3sec): Press and hold the △ and SET keys (in that order) together for 3 sec. The unit will enter Transmission output 1 Zero adjustment mode.
- ▽ + SET (3sec): Press and hold the ▽ and SET keys (in that order) together for 3 sec. The unit will enter Transmission output 2 Zero adjustment mode.
- MODE, SET: Press the MODE or SET key. The unit will enter the next setting item.
- To revert to pH/Temperature Display Mode, or Cleansing Output Mode, press and hold the MODE key for 3 sec while in any mode.

Abbreviations: Trans: Transmision, Temp.: Temperature
Compen: Compensation

③

EVT4 Action Group

SET

Setting items: Same as item settings for EVT1 action group. For EVT4, read EVT1 column(p.19) and substitute EVT1 with EVT4.
(e.g.) EVT 1F → EVT4F

SET

MODE

Basic Function Group

SET

- Set value lock P.34
- Communication protocol P.34
- Instrument number P.34
- Communication speed P.35
- Data bit/Parity P.35
- Stop bit P.35
- Transmission output 1 type P.35
- Transmission output 1 high limit P.35
- Transmission output 1 low limit P.36
- Transmission output 2 type P.36
- Transmission output 2 high limit P.36
- Transmission output 2 low limit P.36
- Trans. output 1 status when calibrating P.37
- Trans. output 1 value HOLD when calibrating P.37
- Trans. output 2 status when calibrating P.37
- Trans. output 2 value HOLD when calibrating P.37
- Backlight selection P.37
- pH color P.38

MODE

Zero/Slope Group

SET

- Zero indication P.41
- Slope indication P.41

SET

- pH color reference value P.38
- pH color range P.38
- Backlight time P.38
- Bar graph indication P.39
- EVT output when input errors occur
- Temp. Display when no temp. compen. P.39
- Number of cleansing cycles P.39
- Cleansing interval P.39
- Cleansing time P.39
- Restore time after cleansing P.40
- Trans. output 1 status when cleansing P.40
- Trans. output 1 value HOLD when cleansing P.40
- Trans. output 2 status when cleansing P.40
- Trans. output 2 value HOLD when cleansing P.41
- pH input error alarm time unit P.41

SET

④

7. Setup

Setup should be done before using this instrument according to the user's conditions:

Setting the pH input, Temperature input, EVT1, EVT2, EVT3 (EVT3 option) and EVT4 (EVT3 option) types, Serial communication (C5 option), Transmission output 1, Transmission output 2 (TA2 option), and Indication settings (Backlight selection, pH color, etc.)

Setup can be conducted in the pH Input group, Temperature Input group, EVT1, EVT2, EVT3, EVT4 Action groups and Basic Function group.

If the user's specification is the same as the factory default of the AER-102-PH, or if setup has already been completed, it is not necessary to set up the instrument. Proceed to Section "8. Calibration (p.42)".

7.1 Turn the Power Supply to the AER-102-PH ON.

For approx. 4 seconds after the power is switched ON, the following characters are indicated on the pH Display and Temperature Display.

Depending on the input specification, indication on the Temperature Display differs as follows:

Pt spec

pH Display	Temperature Display	Item selected in [Electrode RTD (p.24)]	Item selected in [Pt100 input wire type (p.24)]
PH	Unlit	NoNE: No temperature compensation	
	Pt 100	Pt 100: Pt1000	
	Pt 2	Pt 1□□: Pt100	2WI RE: 2-wire type
	Pt 3		3WI RE: 3-wire type

Cu spec

pH Display	Temperature Display	Item selected in [Electrode RTD (p.24)]
PH	Unlit	NoNE: No temperature compensation
	cU5□□	cU5□□: Cu500

During this time, all outputs are in OFF status, and action indicators go off.

After that, measurement starts, indicating the item selected in [Backlight selection (p.37)].

This status is called pH/Temperature Display Mode, or Cleansing Output Mode.

7.2 pH Input Group

To enter the pH Input group, follow the procedure below.

① F.Nc. 1 Press the MODE key in pH/Temperature Display Mode, or Cleansing Output Mode.

② TYPE Press the SET key.
The unit proceeds to the pH Input group, and "pH 7 calibration standard" item will appear.

Character	Setting Item, Function, Setting Range	Factory Default
TYPE JIS	**pH 7 calibration standard** • Selects pH 7 calibration value standard. • Not available if MANU (Manual) is selected in [pH calibration Auto/Manual]. • JIS : JIS (Japanese Industrial standards) US : US standard	JIS
SEPH PH4	**2nd solution** • Selects the 2nd solution for the automatic pH calibration out of pH 2, pH 4, pH 9 and pH 10 (JIS). [The 1st solution is fixed at pH 7 (JIS or US standard).] • Not available if MANU (Manual) is selected in [pH calibration Auto/Manual]. • PH2 : pH 2 PH4 : pH 4 PH9 : pH 9 PH 10 : pH 10	pH 4
AUTC AUTo	**pH calibration Auto/Manual** • Selects either automatic or manual pH calibration. • AUTo : Automatic MANU : Manual	Automatic
dP 1 00.00	**Decimal point place** • Selects the decimal point place. • 0 : No decimal point 0.0 : 1 digit after decimal point 00.00 : 2 digits after decimal point	2 digits after decimal point

Character	Setting Item, Function, Setting Range	Factory Default
FILT □□□0.0	**pH input filter time constant** • Sets filter time constant for pH input. Even when pH measured value before filter process changes as shown in (Fig. 7.2-1), if the filter time constant "T" is set, the pH measured value changes as shown in (Fig. 7.2-2) so that pH measured value after finishing filter process can reach 63% (of the desired value) after T seconds have passed. If the filter time constant is set too large, it affects EVT action due to the delay of response. (e.g.) In case the LSD (least significant digit) of the pH measured value prior to filter process is fluctuating, it can be suppressed by using the filter time constant. 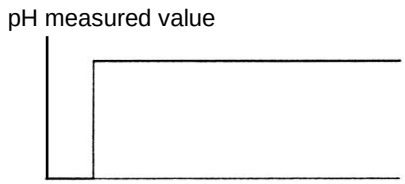 (Fig. 7.2-1) 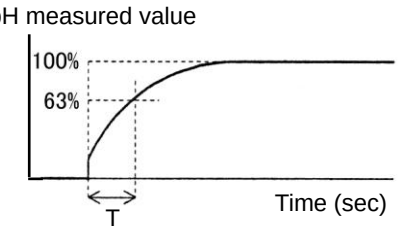 (Fig. 7.2-2) • Setting range: 0.0 to 60.0 seconds	0.0 seconds
PHo□□ □□0.00	**pH input sensor correction** • Sets pH input sensor correction value. This corrects the input value from the pH Combined Electrode Sensor. When a sensor cannot be set at the exact location where measurement is desired, the sensor-measured pH may deviate from the pH in the measured location. In this case, desired pH can be obtained by adding a sensor correction value. However, it is effective within the measurement range regardless of the sensor correction value. pH after sensor correction= Current pH + (Sensor correction value) • Setting range: pH -1.40 to 1.40 (*)	0.00
dFcT□ □□□20	**pH inputs for moving average** • Sets the number of pH inputs used to obtain a moving average. • Setting range: 1 to 120	20

(*) The placement of the decimal point does not follow the selection. It is fixed.

7.3 Temperature Input Group

To enter the Temperature Input group, follow the procedure below.

① F.Nc.2□ Press the MODE key twice in pH/Temperature Display Mode, or Cleansing Output Mode.

② tEMP□ Press the SET key.

The unit enters the Temperature Input group, and "Electrode RTD" item will appear.

Character	Setting Item, Function, Setting Range	Factory Default
5EN5□ Pt 10□	**Electrode RTD**	Pt spec: Pt1000 Cu spec: Cu500
	• Selects RTD type of the electrode. • Depending on the input specification, the following can be selected. **Pt spec** NoNE□ : No temperature compensation Pt 10□ : Pt1000 Pt 1□□ : Pt100 **Cu spec** NoNE□ : No temperature compensation cU5□□ : Cu500	
5tNd□ □□25.0	**Reference temperature**	25.0℃
	• Sets reference temperature of temperature compensation. • Available when NoNE□ (No temperature compensation) is selected in [Electrode RTD]. • Setting range: 5.0 to 95.0℃	
dP2□□ □□□0.0	**Decimal point place**	1 digit after decimal point
	• Selects decimal point place to be indicated on the Temperature Display. • □□□□0 : No decimal point □□□0.0 : 1 digit after decimal point	
cNEct 3Wi RE	**Pt100 input wire type**	3-wire type
	• Selects the input wire type when Pt 1□□ (Pt100) is selected in [Electrode RTD]. • Available only when Pt 1□□ (Pt100) is selected in [Electrode RTD]. • 2Wi RE : 2-wire type 3Wi RE : 3-wire type	
cAbLE □□□0.0	**Cable length correction**	0.0 m
	• Sets the cable length correction value. • Available when 2Wi RE (2-wire type) is selected in [Pt100 input wire type]. • Setting range: 0.0 to 100.0 m	
c5Ec□ □□0.30	**Cable cross-section area**	0.30 mm^2
	• Sets the cable cross-section area. • Available when 2Wi RE (2-wire type) is selected in [Pt100 input wire type]. • Setting range: 0.10 to 2.00 mm^2	
dFct□ □□□20	**Temperature inputs for moving average**	20
	• Sets the number of temperature inputs used to obtain a moving average. • Setting range: 1 to 120	

7.4 EVT1 Action Group

To enter the EVT1 Action group, follow the procedure below.
This group is not available if Transmission output 2 (TA2 option) is ordered.

① EVT.a.1 Press the MODE key 3 times in pH/Temperature Display Mode, or Cleansing Output Mode.

② EVT 1F Press the SET key.

The unit proceeds to the EVT1 Action group, and "EVT1 type" will appear.

Character	Setting Item, Function, Setting Range	Factory Default
EVT 1F -----	**EVT1 type** • Selects an EVT1 output (Contact output 1) type. (Fig 7.4-1, pp.26,27) **Note: If EVT1 type is changed, EVT1 value defaults to 0.00 or 0.0.** • If NoNE (No temperature compensation) is selected in [Electrode RTD (p.23)], even if Temperature input low limit or Temperature input high limit action is selected, EVT1 action will be disabled. • ----- : No action PH_L : pH input low limit action PH_H : pH input high limit action TEMPL : Temperature input low limit action TEMPH : Temperature input high limit action ERoUT : Error output [When the error type is "Error" (Table 7.4-1), the output is turned ON.] FAIL : Fail output [When the error type is "Fail" (Table 7.4-1), the output is turned ON.] CLEO : Cleansing output EPUL : pH input error alarm output EPVA : pH fluctuation alarm output PH_HL : pH input High/Low limits independent action TEMHL : Temperature input High/Low limits independent action • **Error output, Fail output (Table 7.4-1)**	No action

Error Type	Error Contents	Description
Error	Response Speed Error	When calibrating, the response of the pH Combined Electrode Sensor is slow. When the difference between the input and each of the 1st and 2nd solutions are within pH ±1.50, and input fluctuation is over pH ±0.05 (in 10 seconds of assessment cycles) for 5 minutes, this is assumed to be an error. However, if input fluctuation is less than or equal to pH ±0.05, this is assumed to be within the normal range.
Error	Electrode Sensitivity Error	When calibrating, sensitivity of the pH Combined Electrode Sensor has deteriorated. The difference between 1st and 2nd standard solution value after calibration is less than or equal to pH 2.00.
Error	Asymmetry Potential Error	When calibrating pH 7, the difference in electromotive force between the sensor-measured value and standard value exceeds the equivalent of pH ±1.50.
Error	Standard Solution Error	The specified standard solution has not been used. When pH ±1.50 is exceeded for the 1st and 2nd solutions.

Character	Setting Item, Function, Setting Range	Factory Default

Error Type	Error Contents	Description
Error	Solution Temperature Error	When temperature is 55℃ or more at pH 10 solution.
Error	Outside Temp. Compen. Range	Measured temperature has exceeded 110.0℃.
Error	Outside Temp. Compen. Range	Measured temperature is less than 0.0℃.
Fail	Temp. Sensor Burnout	Temperature sensor lead wire is burnt out.
Fail	Temp. Sensor Short-circuited	Temperature sensor lead wire is short-circuited.

Abbreviations: Temp.: Temperature, Compen: Compensation

• **EVT1 Action**

EVT1 Type	P Control Action	ON/OFF Control Action
pH input low limit action, Temperature input low limit action (Activated based on indication value)	EVT1 proportional band 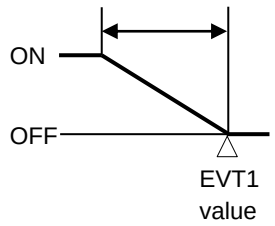	If Medium Value is selected in [EVT1 hysteresis type]: 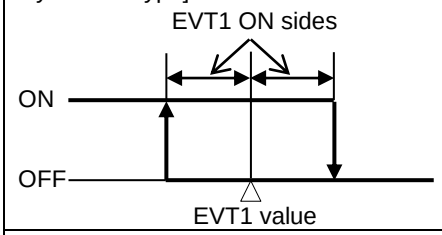 If Reference Value is selected in [EVT1 hysteresis type]: 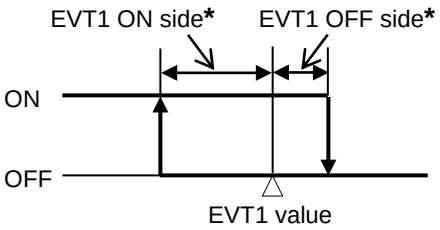
pH input high limit action, Temperature input high limit action (Activated based on indication value)	EVT1 proportional band 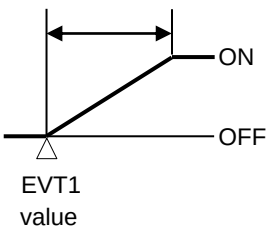	If Medium Value is selected in [EVT1 hysteresis type]: 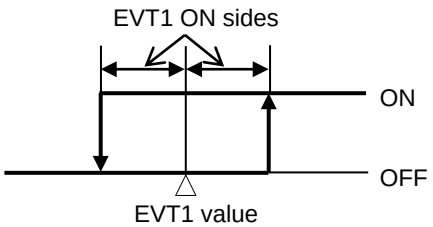 If Reference Value is selected in [EVT1 hysteresis type]: 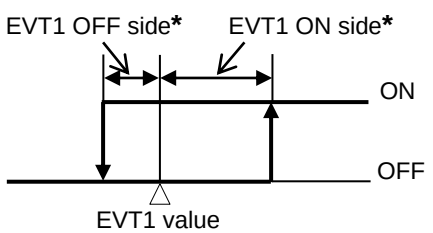

Character	Setting Item, Function, Setting Range	Factory Default

*** (on p.26) Setting Example:**

If [EVT1 ON side (E 1dFo)] is set to 0.00 or 0.0, EVT1 output can be turned ON at the value set in [EVT1 value (EV 1□)].

If [EVT1 OFF side (E 1dFU)] is set to 0.00 or 0.0, EVT1 output can be turned OFF at the value set in [EVT1 value (EV 1□)].

EVT1 Type	ON/OFF Control Action
pH input High/Low limits independent action, Temperature input High/Low limits independent action (Activated based on indication value)	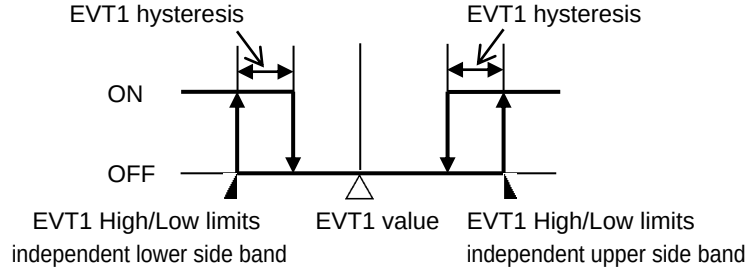

(Fig. 7.4-1)

EV 1□ □□0.00	**EVT1 value**	pH input: pH 0.00 Temperature input: 0.0℃
	• Sets EVT1 value. • Not available if -----(No action), EroUr (Error output), FAIL□ (Fail output), cLEG□ (Cleansing output) or EPUL□ (pH input error alarm output) is selected in [EVT1 type]. • Setting range: pH input: pH 0.00 to 14.00 (*) Temperature input: 0.0 to 100.0℃ (*)	
EP 1□□ □□0.00	**EVT1 proportional band**	pH input: pH 0.00 Temperature input: 0.0℃
	• Sets EVT1 proportional band. ON/OFF control action when set to 0.00 or 0.0. • Not available if -----(No action), EroUr (Error output), FAIL□ (Fail output), cLEG□ (Cleansing output) or EPUL□ (pH input error alarm output) is selected in [EVT1 type]. • Setting range: pH input: pH 0.00 to 14.00 (*) Temperature input: 0.0 to 100.0℃ (*)	
E IRSt □□0.00	**EVT1 reset**	pH input: pH 0.00 Temperature input: 0.0℃
	• Sets EVT1 reset value. • Not available if -----(No action), EroUr (Error output), FAIL□ (Fail output), cLEG□ (Cleansing output) or EPUL□ (pH input error alarm output) is selected in [EVT1 type]. • Not available for the ON/OFF control action. • Setting range: pH input: pH ±4.00 (*) Temperature input: ±10.0℃ (*)	

(*) The placement of the decimal point does not follow the selection. It is fixed.

Character	Setting Item, Function, Setting Range	Factory Default
E 1dI F hdI F□	**EVT1 hysteresis type** • Selects EVT1 output hysteresis type (Medium or Reference Value). (Fig. 7.4-1, pp. 26, 27) • Not available if -----(No action), ErroUr (Error output), FAI L□ (Fail output), cLEG□ (Cleansing output) or EPUL□ (pH input error alarm output) is selected in [EVT1 type]. .• Not available for the P control action. • cdI F□: Medium Value Sets the same value for both ON and OFF sides in relation to EVT1 value. Only ON side needs to be set. hdI F□: Reference Value Sets individual values for ON and OFF sides in relation to EVT1 value. Both ON and OFF sides need to be set individually.	Reference Value
E 1dFo □□0.10	**EVT1 ON side** • Sets the span of EVT1 ON side. (Fig. 7.4-1, p.26) If cdI F□ (Medium Value) is selected in [EVT1 hysteresis type], the span of ON/OFF side will be the same value. • Not available if -----(No action), ErroUr (Error output), FAI L□ (Fail output), cLEG□ (Cleansing output) or EPUL□ (pH input error alarm output) is selected in [EVT1 type]. • Setting range: pH input: pH 0.00 to 4.00 (*) Temperature input: 0.0 to 10.0℃ (*)	pH input: pH 0.10 Temperature input: 1.0℃
E 1dFU □□0.10	**EVT1 OFF side** • Sets the span of EVT1 OFF side. (Fig. 7.4-1, p.26) • Not available if -----(No action), ErroUr (Error output), FAI L□ (Fail output), cLEG□ (Cleansing output) or EPUL□ (pH input error alarm output) is selected in [EVT1 type]. • Not available for the P control action, or if cdI F□ (Medium Value) is selected in [EVT1 hysteresis type]. • Setting range: pH input: pH 0.00 to 4.00 (*) Temperature input: 0.0 to 10.0℃ (*)	pH input: pH 0.10 Temperature input: 1.0℃
E 1oNT □□□□0	**EVT1 ON delay time** • Sets EVT1 delay time. The EVT1 output does not turn ON (under the conditions of turning ON) after the input value exceeds the EVT1 value until the time set in [EVT1 ON delay time] elapses. • Not available if -----(No action), ErroUr (Error output), FAI L□ (Fail output), cLEG□ (Cleansing output) or EPUL□ (pH input error alarm output) is selected in [EVT1 type]. • Not available for the P control action. • Setting range: 0 to 10000 seconds	0 sec.

(*) The placement of the decimal point does not follow the selection. It is fixed.

Character	Setting Item, Function, Setting Range	Factory Default
E IoFF 0	**EVT1 OFF delay time** • Sets EVT1 delay time. The EVT1 output does not turn OFF (under the conditions of turning OFF) after the input value exceeds the EVT1 value until the time set in [EVT1 OFF delay time] elapses. • Not available if ----- (No action), ERoUr (Error output), FAIL (Fail output), cLEG (Cleansing output) or EPUL (pH input error alarm output) is selected in [EVT1 type]. • Not available for the P control action. • Setting range: 0 to 10000 seconds	0 sec.
E Ic 30	**EVT1 proportional cycle** • Sets EVT1 proportional cycle. • Not available if ----- (No action), ERoUr (Error output), FAIL (Fail output), cLEG (Cleansing output) or EPUL (pH input error alarm output) is selected in [EVT1 type]. • Not available for the ON/OFF control action. • Setting range: 1 to 300 seconds	30 sec.
E IoLH 100	**EVT1 output high limit** • Sets EVT1 output high limit value. • Not available if ----- (No action), ERoUr (Error output), FAIL (Fail output), cLEG (Cleansing output) or EPUL (pH input error alarm output) is selected in [EVT1 type]. • Not available for the ON/OFF control action. • Setting range: EVT1 output low limit to 100%	100%
E IoLL 0	**EVT1 output low limit** • Sets EVT1 output low limit value. • Not available if ----- (No action), ERoUr (Error output), FAIL (Fail output), cLEG (Cleansing output) or EPUL (pH input error alarm output) is selected in [EVT1 type]. • Not available for the ON/OFF control action. • Setting range: 0% to EVT1 output high limit	0%
ooNT 1 0	**Output ON Time when EVT1 Output ON** • Sets Output ON time when EVT1 output is ON. If ON time and OFF time are set, EVT1 output can be turned ON/OFF in a configured cycle when EVT1 output is turned ON.(Fig. 7.4-2, p.30) • Not available if ----- (No action), ERoUr (Error output), FAIL (Fail output), cLEG (Cleansing output) or EPUL (pH input error alarm output) is selected in [EVT1 type]. • Not available for P control action. • Setting range: 0 to 10000 seconds	0 sec.

Character	Setting Item, Function, Setting Range	Factory Default
oFF 1 □□□□0	**Output OFF Time when EVT1 Output ON** • Sets Output OFF time when EVT1 output is ON. If ON time and OFF time are set, EVT1 output can be turned ON/OFF in a configured cycle when EVT1 output is turned ON.(Fig. 7.4-2, p.30) • Not available if ----- (No action), ERoUT (Error output), FAIL□ (Fail output), cLEG□ (Cleansing output) or EPUL□ (pH input error alarm output) is selected in [EVT1 type]. • Not available for P control action. • Setting range: 0 to 10000 seconds	0 sec.

Timing chart (Output ON time and OFF time when EVT1 output is ON)

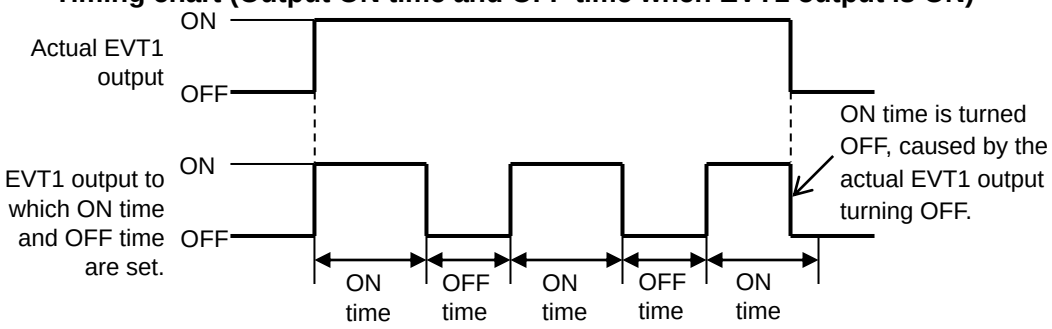

(Fig. 7.4-2)

E Ic4□ -----	**EVT1 pH input error alarm EVT□ type** • Selects EVT□ output type (except EVT1 type) in order to assess EVT1 pH input error alarm. • Available only when EPUL□ (pH input error alarm output) is selected in [EVT1 type]. • ----- : No action EVT2□ : EVT2 type EVT3□ : EVT3 type EVT4□ : EVT4 type	No action
E IPo□ □□0.00	**EVT1 pH input error alarm band when EVT□ output ON** • Sets band to assess EVT1 pH input error alarm when EVT□ output (selected in [EVT1 pH input error alarm EVT□ type]) is ON. • Available only when EPUL□ (pH input error alarm output) is selected in [EVT1 type]. • Setting range: pH 0.00 to 14.00 When set to 0.00, pH input error alarm is disabled.	pH 0.00

Character	Setting Item, Function, Setting Range	Factory Default
E 1Pot □□□□0	**EVT1 pH input error alarm time when EVT□ output ON** • Sets time to assess EVT1 pH input error alarm when EVT□ output (selected in [EVT1 pH input error alarm EVT□ type]) is ON. • Available only when EPUL□ (pH input error alarm output) is selected in [EVT1 type]. • Setting range: 0 to 10000 seconds or minutes (*) When set to 0, pH input error alarm is disabled.	0 sec.
E 1Pc□ □□0.00	**EVT1 pH input error alarm band when EVT□ output OFF** • Sets band to assess EVT1 pH input error alarm when EVT□ output (selected in [EVT1 pH input error alarm EVT□ type]) is OFF. • Available only when EPUL□ (pH input error alarm output) is selected in [EVT1 type]. • Setting range: pH 0.00 to 14.00 When set to 0.00, pH input error alarm is disabled.	pH 0.00
E 1Pcr □□□□0	**EVT1 pH input error alarm time when EVT□ output OFF** • Sets time to assess EVT1 pH input error alarm when EVT□ output (selected in [EVT1 pH input error alarm EVT□ type]) is OFF. • Available only when EPUL□ (pH input error alarm output) is selected in [EVT1 type]. • Setting range: 0 to 10000 seconds or minutes (*) When set to 0, pH input error alarm is disabled.	0 sec.
MVZN 1 □□50.0	**EVT1 cycle variable range** • Sets EVT1 cycle variable range. • Not available if -----(No action), EROUT (Error output), FAIL□ (Fail output), CLEO□ (Cleansing output) or EPUL□ (pH input error alarm output) is selected in [EVT1 type]. • Not available for the ON/OFF control action. • Setting range: 1.0 to 100.0%	50.0%
cENT 1 □□□□0	**EVT1 cycle extended time** • Sets EVT1 cycle extended time. • Not available if -----(No action), EROUT (Error output), FAIL□ (Fail output), CLEO□ (Cleansing output) or EPUL□ (pH input error alarm output) is selected in [EVT1 type]. • Not available for the ON/OFF control action. • Setting range: 0 to 300 seconds	0 sec.

(*) Time unit follows the selection in [pH input error alarm time unit].

Character	Setting Item, Function, Setting Range	Factory Default
E1PAT □□□□0	**EVT1 pH fluctuation alarm time** • Sets time to assess EVT1 pH fluctuation alarm. Disabled when set to 0 (zero). • Available only when EPVTA□ (pH fluctuation alarm output) is selected in [EVT1 type]. • Setting range: 0 to 72 hours	0 hours
E1PAH □□0.00	**EVT1 pH fluctuation alarm band** • Sets the band to assess EVT1 pH fluctuation alarm. Disabled when set to pH 0.00. • Available only when EPVTA□ (pH fluctuation alarm output) is selected in [EVT1 type]. • Setting range: pH 0.00 to 14.00	pH 0.00
E1_L□ □□0.00	**EVT1 High/Low limits independent lower side band** • Sets the lower side band of EVT1 High/Low limits independent action. (Fig. 7.4-1)(p.27) Disabled when set to pH 0.00 or 0.0℃. • Available when PH_HL (pH input High/Low limits independent action) or TEMHL (Temperature input High/Low limits independent action) is selected in [EVT1 type]. • Setting range: pH input: pH 0.00 to 14.00 Temperature input: 0.0 to 100.0℃	pH input: pH 0.00 Temperature input: 0.0℃
E1_H□ □□0.00	**EVT1 High/Low limits independent upper side band** • Sets the upper side band of EVT1 High/Low limits independent action. (Fig. 7.4-1)(p.27) Disabled when set to pH 0.00 or 0.0℃. • Available when PH_HL (pH input High/Low limits independent action) or TEMHL (Temperature input High/Low limits independent action) is selected in [EVT1 type]. • Setting range: pH input: pH 0.00 to 14.00 Temperature input: 0.0 to 100.0℃	pH input: pH 0.00 Temperature input: 0.0℃
E1_HY □□0.10	**EVT1 hysteresis** • Sets hysteresis of EVT1 High/Low limits independent action. (Fig. 7.4-1)(p.27) • Available when PH_HL (pH input High/Low limits independent action) or TEMHL (Temperature input High/Low limits independent action) is selected in [EVT1 type]. • Setting range: pH input: pH 0.01 to 4.00 Temperature input: 0.1 to 10.0℃	pH input: 0.10 pH Temperature input: 1.0℃

7.5 EVT2 Action Group

To enter the EVT2 Action group, follow the procedure below.

① EVT.a2 Press the MODE key 4 times in pH/Temperature Display Mode, or Cleansing Output Mode.

② EVT 2F Press the SET key.
The unit proceeds to the EVT2 Action group, and ”EVT2 type“ appears.

Action, indication condition and setting range of the EVT2 Action group are the same as those of EVT1 Action group.
Substitute EVT1 with EVT2, and refer to the EVT1 Action group (pp. 25 to 32).

(e.g.) EVT 1F → EVT 2F
EHY 1□ → EHY 2□

7.6 EVT3 Action Group

EVT3 Action group is indicated only when EVT3, EVT4 outputs (EVT3 option) are/is ordered.
To enter the EVT3 Action group, follow the procedure below.

① EVT.a3 Press the MODE key 5 times in pH/Temperature Display Mode, or Cleansing Output Mode.

② EVT 3F Press the SET key.
The unit proceeds to the EVT3 Action group, and ”EVT3 type“ appears.

Action, indication condition and setting range of the EVT3 Action group are the same as those of EVT1 Action group.
Substitute EVT1 with EVT3, and refer to the EVT1 Action group (pp. 25 to 32).

(e.g.) EVT 1F → EVT 3F
EHY 1□ → EHY 3□

7.7 EVT4 Action Group

EVT4 Action group is indicated only when EVT3, EVT4 outputs (EVT3 option) are/is ordered.
To enter the EVT4 Action group, follow the procedure below.

① EVT.a4 Press the MODE key 6 times in pH/Temperature Display Mode, or Cleansing Output Mode.

② EVT 4F Press the SET key.
The unit proceeds to the EVT4 Action group, and ”EVT4 type“ appears.

Action, indication condition and setting range of the EVT4 Action group are the same as those of EVT1 Action group.
Substitute EVT1 with EVT4, and refer to the EVT1 Action group (pp. 25 to 32).

(e.g.) EVT 1F → EVT 4F
EHY 1□ → EHY 4□

7.8 Basic Function Group

To enter the Basic Function group, follow the procedure below.

① aTER Press the MODE key 5 times in pH/Temperature Display Mode, or Cleansing Output Mode.
If EVT3, EVT4 outputs (EVT3 option) are/is ordered, press the MODE key 7 times in pH/Temperature Display Mode, or Cleansing Output Mode.

② LocK Press the SET key.
The unit enters the Basic Function group, and the “Set Value Lock” item will appear.

Character	Setting Item, Function, Setting Range	Factory Default
LocK -----	**Set value lock** • Locks the set values to prevent setting errors. • ----- (Unlock): All set values can be changed. Lock 1 (Lock 1) : None of the set values can be changed. Lock2 (Lock 2) : Only EVT1, EVT2, EVT3, EVT4 values can be changed. Lock3 (Lock 3) : All set values – except Electrode RTD, Temperature calibration value, pH calibration value, pH calibration Auto/Manual, Transmission output 1 Zero and Span adjustment values, Transmission output 2 Zero and Span adjustment values – can be temporarily changed. However, they revert to their previous value after the power is turned off because they are not saved in the non-volatile IC memory. Do not change setting items (EVT1, EVT2, EVT3, EVT4 types). If they are changed, they will affect other setting items. Be sure to select Lock 3 when changing the set value frequently via software communication. (If a value set via software communication is the same as the value before the setting, the value will not be written in the non-volatile IC memory.)	Unlock
cMtL NoML	**Communication protocol** • Selects communication protocol. • Available when the Serial communication (C5 option) is ordered. • NoML : Shinko protocol ModA : MODBUS ASCII mode ModR : MODBUS RTU mode	Shinko protocol
cMNo 0	**Instrument number** • Sets the instrument number of this unit. (The instrument numbers should be set one by one when multiple instruments are connected, otherwise communication is impossible.) • Available when the Serial communication (C5 option) is ordered. • Setting range: 0 to 95	0

Character	Setting Item, Function, Setting Range	Factory Default
cMbP □□□96	**Communication speed** • Selects a communication speed equal to that of the host computer. • Available when the Serial communication (C5 option) is ordered. • □□□96 : 9600 bps □□192 : 19200 bps □□384 : 38400 bps	9600 bps
cMFT 7EVN	**Data bit/Parity** • Selects data bit and parity. • Available when the Serial communication (C5 option) is ordered. • 8NoN : 8 bits/No parity 7NoN : 7 bits/No parity 8EVN : 8 bits/Even 7EVN : 7 bits/Even 8odd : 8 bits/Odd 7odd : 7 bits/Odd	7 bits/Even
cMbT □□□□1	**Stop bit** • Selects the stop bit. • Available when the Serial communication (C5 option) is ordered. • □□□□1: 1 bit □□□□2: 2 bits	1 bit
TRo1 PH□□□	**Transmission output 1 type** • Selects Transmission output 1 type. • If NoNE (No temperature compensation) is selected in [Electrode RTD (p.23)], and if TEMP (Temperature transmission) is selected, the transmission output 1 value will become the value set in [Reference temperature (p.24)], regardless of selection in [Temperature Display when no temperature compensation (p.39)]. • PH□□□ : pH transmission TEMP□ : Temperature transmission MV 1□□ : EVT1 MV transmission (*1) MV2□□ : EVT2 MV transmission MV3□□ : EVT3 MV transmission (*2) MV4□□ : EVT4 MV transmission (*2)	pH transmission
TRLH1 □1400	**Transmission output 1 high limit** • Sets the Transmission output 1 high limit value. (This value correponds to 20 mA DC output.) If Transmission output 1 high limit and low limit are set to the same value, transmission output 1 will be fixed at 4 mA DC. • Setting range: pH transmission: Transmission output 1 low limit to pH 14.00 (*3) Temperature transmission: Transmission output 1 low limit to 100.0℃ (*3) MV transmission: Transmission output 1 low limit to 100.0%	pH transmission: pH 14.00 Temperature transmission: 100.0℃ MV transmission: 100.0%

(*1) Not available when Transmission output 2 (TA2 option) is ordered.

(*2) Available when EVT3, EVT4 outputs (EVT3 option) are/is ordered.

(*3) The placement of the decimal point does not follow the selection. It is fixed.

Character	Setting Item, Function, Setting Range	Factory Default
rLL 1 □□0.00	**Transmission output 1 low limit**	pH transmission: pH 0.00 Temperature transmission: 0.0℃ MV transmission: 0.0%
	• Sets the Transmission output 1 low limit value. (This value correponds to 4 mA DC output.) If Transmission output 1 high limit and low limit are set to the same value, transmission output 1 will be fixed at 4 mA DC. • Setting range: pH transmission: pH 0.00 to Transmission output 1 high limit (*1) Temperature transmission: 0.0℃ to Transmission output 1 high limit (*1) MV transmission: 0.0% to Transmission output 1 high limit	
rRo42 rEMP□	**Transmission output 2 type**	Temperature transmission
	• Selects Transmission output 2 type. • If NoNE□ (No temperature compensation) is selected in [Electrode RTD (p.23)], and if rEMP□ (Temperature transmission) is selected, the transmission output 2 value will become the value set in [Reference temperature (p.24)], regardless of selection in [Temperature Display when no temperature compensation (p.39)]. • PH□□□ : pH transmission rEMP□ : Temperature transmission MV2□□ : EVT2 MV transmission MV3□□ : EVT3 MV transmission (*2) MV4□□ : EVT4 MV transmission (*2)	
rRLH2 □100.0	**Transmission output 2 high limit**	pH transmission: pH 14.00 Temperature transmission: 100.0℃ MV transmission: 100.0%
	• Sets the Transmission output 2 high limit value. (This value correponds to 20 mA DC output.) If Transmission output 2 high limit and low limit are set to the same value, transmission output 2 will be fixed at 4 mA DC. • Setting range: pH transmission: Transmission output 2 low limit to pH 14.00 (*1) Temperature transmission: Transmission output 2 low limit to 100.0℃ (*1) MV transmission: Transmission output 2 low limit to 100.0%	
rRLL2 □□0.0	**Transmission output 2 low limit**	pH transmission: pH 0.00 Temperature transmission: 0.0℃ MV transmission: 0.0%
	• Sets the Transmission output 2 low limit value. (This value correponds to 4 mA DC output.) If Transmission output 2 high limit and low limit are set to the same value, transmission output 2 will be fixed at 4 mA DC. • Setting range: pH transmission: pH 0.00 to Transmission output 2 high limit (*1) Temperature transmission: 0.0℃ to Transmission output 2 high limit (*1) MV transmission: 0.0% to Transmission output 2 high limit	

(*1) The placement of the decimal point does not follow the selection. It is fixed.

(*2) Available if EVT3, EVT4 outputs (EVT3 option) are/is ordered.

Character	Setting Item, Function, Setting Range	Factory Default
tRn1 bEFH	**Transmission output 1 status when calibrating** • Selects Transmission output 1 status when calibrating pH. • Selection range bEFH: Last value HOLD (Retains the last value before pH calibration, and outputs it.) nEtH: Set value HOLD (Outputs the value set in [Transmission output 1 value HOLD when calibrating].) PVH: Measured value (Outputs the measured value when calibrating pH.)	Last value HOLD
tR1E1 0.00	**Transmission output 1 value HOLD when calibrating** • Sets Transmission output 1 value HOLD. • Available only when nEtH (Set value Hold) is selected in [Transmission output 1 status when calibrating]. • Setting range: pH transmission: pH 0.00 to 14.00 (*) Temperature transmission: 0.0 to 100.0℃ (*) MV transmission: 0.0 to 100.0%	pH transmission: pH 0.00 Temperature transmission: 0.0℃ MV transmission: 0.0%
tRn2 bEFH	**Transmission output 2 status when calibrating** • Selects Transmission output 2 status while calibrating pH. • Selection range bEFH: Last value HOLD (Retains the last value before pH calibration, and outputs it.) nEtH: Set value HOLD (Outputs the value set in [Transmission output 2 value HOLD when calibrating].) PVH: Measured value (Outputs the measured value when calibrating pH.)	Last value HOLD
tR1E2 0.0	**Transmission output 2 value HOLD when calibrating** • Sets Transmission output 2 value HOLD. • Available only when nEtH (Set value HOLD) is selected in [Transmission output 2 status when calibrating]. • Setting range: pH transmission: pH 0.00 to 14.00 (*) Temperature transmission: 0.0 to 100.0℃ (*) MV transmission: 0.0 to 100.0%	pH transmission: pH 0.00 Temperature transmission: 0.0℃ MV transmission: 0.0%
bKLt ALL	**Backlight selection** • Selects the display to backlight. • ALL : All are backlit. PH : pH Display tEMP : Temperature Display Ac : Action indicators PHtMP : pH Display + Temperature Display PHAc : pH Display + Action indicators tMPAc : Temperature Display + Action indicators	All are backlit

(*) The placement of the decimal point does not follow the selection. It is fixed.

Character	Setting Item, Function, Setting Range	Factory Default
coLR REd	**pH color** • Selects a color for the pH Display. • GRN : Green REd : Red oRG : Orange PHCR : pH color changes continuously. The pH Display color changes according to [pH color reference value] and [pH color range] settings. • When pH is lower than [pH color reference value] – [pH color range]: Orange • When pH is within [pH color reference value] ± [pH color range]: Green • When pH is higher than [pH color reference value] + [pH color range]: Red 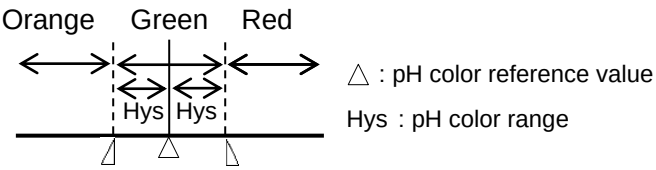 (Fig. 7.8-1)	Red
cLP 7.00	**pH color reference value** • Sets a reference value for pH color to be green when PHCR (pH color changes continuously) is selected in [pH color]. • Setting range: pH 0.00 to 14.00 (*)	pH 7.00
cLRG 2.00	**pH color range** • Sets a range for pH color to be green when PHCR (pH color changes continuously) is selected in [pH color]. • Setting range: pH 0.10 to 14.00 (*)	pH 2.00
dPTM 0	**Backlight time** • Sets time to backlight from no operation status until backlight is switched off. When set to 0, the backlight remains ON. Backlight relights by pressing any key while backlight is OFF. • Setting range: 0 to 99 minutes	0 minutes

(*) The placement of the decimal point does not follow the selection. It is fixed.

Character	Setting Item, Function, Setting Range	Factory Default
bERHL -----	**Bar graph indication** • Selects bar graph indication. • ----- : No indication rRoT 1 : Transmission output 1 rRoT 2 : Transmission output 2 Segments will light in accordance with the output. Scale is -5 to 105%. Segments will light from left to right in accordance with the output. [When the output is 50%] 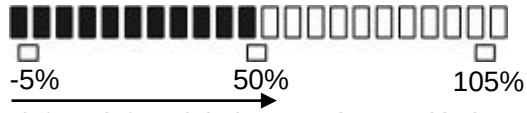 Lit from left to right in accordance with the output. (Fig. 7.8-2)	No indication
INERR oFF	**EVT output when input errors occur** • If input errors occur, such as pH Combined Electrode Sensor is disconnected or short-circuited, EVT output can be Enabled or Disabled. If "Enabled" is selected, EVT output will be maintained when input errors occur. If "Disabled" is selected, EVT output will be turned OFF when input errors occur. • Available when PH_L (pH input low limit action), PH_H (pH input high limit action), rEMPL (Temperature input low limit action), or rEMPH (Temperature input high limit action) is selected in [EVT type]. • oFF: Disabled oN: Enabled	Disabled
oFdP oFF	**Temperature Display when no temperature compensation** • Selects an item to be indicated on the Temperature Display when NoNE (No temperature compensation) is selected in [Electrode RTD (p.23)]. • Available only when NoNE (No temperature compensation) is selected in [Electrode RTD (p.24)]. • oFF: Unlit HTd: Reference temperature Temperature set in [Reference temperature (p.24)] will be indicated.	Unlit
ccNT 0	**Number of cleansing cycles** • Sets the number of cleansing outputs. (Fig. 7.8-3) (p.40) • Available for this setting item and all following items if cLEG (Cleansing output) is selected in any of [EVT1 to EVT4 types (pp. 25 to 27)]. • Setting range: 0 to 10 (0: Continuous cleansing)	0 (Continuous cleansing)
ccYc 360	**Cleansing interval** • Sets an interval between cleansings. (Fig. 7.8-3) • Setting range: 60 to 3000 minutes	360 minutes
cTIM 600	**Cleansing time** • Sets the cleansing output time in the cleansing output interval.(Fig. 7.8-3) • Setting range: 1 to 1800 seconds	600 sec.

Character	Setting Item, Function, Setting Range	Factory Default
cREc □□600	**Restore time after cleansing** • Sets the time to restore units to normal operation after cleansing output. (Fig. 7.8-3) • Setting range: 1 to 1800 seconds	600 sec.
• **Cleansing Output Action** 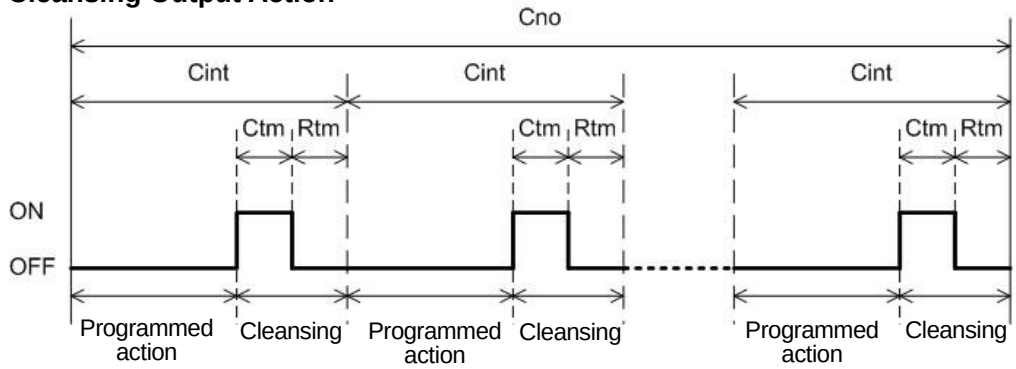 Cno: Number of cleansing cycles Cint: Cleansing interval Ctm: Cleansing time Rtm: Restore time after cleansing (Fig. 7.8-3)		
cch 1 bEFH	**Transmission output 1 status when cleansing** • Selects Transmission output 1 output status when cleansing action is performing. • bEFH: Last value HOLD (Retains the last value before cleansing action, and outputs it.) SEtH: Set value HOLD (Outputs the value set in [Transmission output 1 value HOLD when cleansing].) PVH: Measured value (Outputs the measured value when cleansing action is performing.)	Last value HOLD
cSE 1 □□0.00	**Transmission output 1 value HOLD when cleansing** • Sets Transmission output 1 value HOLD. Available only when SEtH (Set value HOLD) is selected in [Transmission output 1 status when cleansing]. • Setting range: pH transmission: pH 0.00 to 14.00 pH (*) Temperature transmission: 0.0 to 100.0℃ (*) MV transmission: 0.0 to 100.0%	pH transmission: pH 0.00 Temperature transmission: 0.0℃ MV transmission: 0.0%
cch2 bEFH	**Transmission output 2 status when cleansing** • Selects Transmission output 2 output status when cleansing action is performing. • bEFH: Last value HOLD (Retains the last value before cleansing action, and outputs it.) SEtH: Set value HOLD (Outputs the value set in [Transmission output 1 value HOLD when cleansing].) PVH: Measured value (Outputs the measured value when cleansing action is performing.)	Last value HOLD

Character	Setting Item, Function, Setting Range	Factory Default
c5E2 □□□0.0	**Transmission output 2 value HOLD when cleansing**	pH transmission: pH 0.00 Temperature transmission: 0.0℃ MV transmission: 0.0%
	• Sets Transmission output 2 value HOLD. Available only when 5ETH □ (Set value HOLD) is selected in [Transmission output 2 status when cleansing]. • Setting range: pH transmission: pH 0.00 to 14.00 (*) Temperature transmission: 0.0 to 100.0℃ (*) MV transmission: 0.0%	
M_5□□ 5Ec□□	**pH input error alarm time unit**	Second(s)
	• Selects the time unit of pH input error alarm. • Selection item 5Ec□□: Second(s) MI N□□: Minute(s)	

7.9 Zero/Slope Indication Group

To enter the Zero/Slope Indication group, follow the procedure below.

① Z.R5R□ Press the MODE key 6 times in pH/Temperature Display Mode, or Cleansing Output Mode.
If EVT3, EVT4 outputs (EVT3 option) are/is ordered, press the MODE key 8 times in pH/Temperature Display Mode, or Cleansing Output Mode.

② ZERo□ Press the SET key.
The unit enters the Zero/Slope Indication group, and the “Zero indication” item will appear.

Character	Setting Item, Function, Indication Range	Factory Default
ZERo□ □□□0.0	**Zero indication**	0.0 mV
	• Indicates potential difference when pH 7 is calibrated. However, if Manual calibration is performed, zero indication value calculated at previous automatic calibration will not be updated. If calibration is not successfully completed, zero indication will show the value before calibration. • Indication range: Voltage equivalent to pH ±1.5	
5LoP□ □□59.2	**Slope indication**	59.2 mV
	• From the voltage calibrated at pH calibration, electromotive force for the change of pH 1 will be indicated. However, if calibration is not successfully completed, slope indication will show the value before calibration. • Indication range: Voltage equivalent to pH 0.00 to 14.00	

8. Calibration

pH Calibration mode, Temperature Calibration mode, Transmission output 1 and 2 adjustment modes are described below.

8.1 pH Calibration Mode

For pH measurement using the glass electrode method, pH in the sensor location, electrode performance and standard solution accuracy respectively play an important role for obtaining reliable data.

There are 2 methods in pH calibration: Automatic Calibration and Manual Calibration.

If AUTo (Automatic) is selected in [pH Calibration Auto/Manual (p.22)], pH will be automatically calibrated.

If MANU (Manual) is selected in [pH Calibration Auto/Manual (p.22)], pH will be calibrated manually.

When NoNE (No temperature compensation) is selected in [Electrode RTD (p.24)], calibration will be automatically performed at 25℃ basis.

Perform pH calibration while pH measured value is in a stable status.

The unit cannot enter pH Calibration mode in the following cases:

- When LocK 1 (Lock 1), LocK2 (Lock 2) or LocK3 (Lock 3) is selected in [Set value lock (p.34)].
- When cLEO (Cleansing output) is selected in any of [EVT1 to EVT4 types (pp. 25 to 27)], and cleansing action is performing using the 'Cleansing time' and 'Restore time after cleansing' settings.

8.1.1 Automatic Calibration

The 1st point standard solution [pH 7 (JIS or US standard)] selected in [pH7 calibration standard (p.22)] is automatically calibrated first. Then, the 2nd point standard solution [any one of pH 2, pH 4, pH 9 or pH 10 (JIS)] selected in [2nd Solution (p.22)] is calibrated. The pH value (based on JIS Z8802) at each temperature of pH standard solution will be automatically calculated.

The following outlines the procedure for Automatic calibration.

(1) 1st Point Calibration

① Immerse the pH Combined Electrode Sensor in the 1st point standard solution (pH 7).
When selecting bEFH (Last value HOLD) in [Transmission output 1 status when calibrating (p.37)] or in [Transmission output 2 status when calibrating] (p.37)], select it while the pH Combined Electrode Sensor is being immersed in the solution currently calibrated.
After that, immerse the pH Combined Electrode Sensor in the 1st point standard solution (pH 7).

② Press and hold the ▽ key and MODE key (in that order) together for 3 seconds in pH/Temperature Display Mode, or Cleansing Output Mode.
The unit enters pH Calibration mode, and indicates the following:

Display	Indicated Contents
pH Display	Unlit
Temperature Display	PH 7

③ Press the MODE key.

Automatic calibration of the 1st point starts.

During Automatic calibration, pH on the pH Display flashes.

Automatic calibration is carried out using the Automatic electrode quality evaluation function (*).

When flashing stops, automatic calibration of the 1st point is complete.

(*) pH 7 calibration standard (p.22) and values calibrated by the Automatic electrode quality evaluation function are shown below.

pH 7 Calibration Standard	Value Calibrated by Automatic Electrode Quality Evaluation Function
JIS	pH 6.86
US standard	pH 7.00

(2) 2nd Point Calibration

① Confirm that automatic calibration of the 1st point is complete, then press the MODE key.

The 2nd standard solution will be shown on the display as follows:

Display	Indicated Contents
pH Display	Unlit
Temperature Display	pH standard solution selected in [2nd solution (p.22)].

② Rinse the electrode, and immerse the pH Combined Electrode Sensor in the 2nd standard solution.

③ Press the MODE key.

Automatic calibration for the 2nd point starts.

During Automatic calibration, pH on the pH Display flashes.

Automatic calibration is carried out using the Automatic electrode quality evaluation function.

When flashing stops, automatic calibration of the 2nd point will be complete.

④ Confirm that automatic calibration of the 2nd point is complete, then press the MODE key.

The newly calibrated values will be applied to the unit, indicating the following:

Display	Indicated Contents
pH Display	CAL
Temperature Display	Good

pH automatic calibration is now complete.

⑤ Press the SET key.

The unit reverts to pH/Temperature Display Mode, or Cleansing Output Mode.

8.1.2 Manual Calibration

Manual calibration can be carried out using 2 types of solution with a difference of 2 pH or more.

The following outlines the procedure for Manual calibration.

(1) 1st Point Calibration

① Immerse the pH Combined Electrode Sensor in the 1st standard solution.
When selecting bEFH (Last value HOLD) in [Transmission output 1 status when calibrating (p.37)] or in [Transmission output 2 status when calibrating] (p.37)], select it while the pH Combined Electrode Sensor is being immersed in the solution currently calibrated.
After that, immerse the pH Combined Electrode Sensor in the 1st point standard solution.

② Press and hold the ▽ key and MODE key (in that order) together for 3 seconds in pH/Temperature Display Mode, or Cleansing Output Mode.
The unit enters pH Calibration mode, and indicates the following:

Display	Indicated Contents
pH Display	Unlit
Temperature Display	-1-

③ Press the MODE key.
The unit enters the 1st point manual calibration mode, indicating the following:

Display	Indicated Contents
pH Display	Indicates -1- and pH alternately.
Temperature Display	Calibrated value

④ Set a calibration value with the △ or ▽ key while checking the pH.
pH calibration value: -7.00 to 7.00

⑤ Press the MODE key.
The 1st point calibration is completed, indicating the following:

Display	Indicated Contents
pH Display	Unlit
Temperature Display	-2-

(2) 2nd Point Calibration

① Rinse the electrode, and immerse the pH Combined Electrode Sensor in the 2nd standard solution.

② Press the MODE key.
The 2nd point can be calibrated manually, indicating the following:

Display	Indicated Contents
pH Display	Indicates -2- and pH alternately.
Temperature Display	Calibrated value

③ Set a calibration value with the △ or ▽ key while checking the pH.
pH calibration value: -7.00 to 7.00

④ Press the MODE key.
The 2nd point calibration is completed. The newly calibrated values will be applied to the unit, indicating the following:

Display	Indicated Contents
pH Display	CAL
Temperature Display	Good

Manual pH calibration is now complete.

⑤ Press the SET key.
The unit reverts to pH/Temperature Display Mode, or Cleansing Output Mode.

8.1.3 Error Code during pH Calibration

During pH calibration, if pH calibration cannot be performed due to unstable pH input or temperature compensation error, etc., the error code (Table 8.1.3-1) will flash on the Temperature Display.

To cancel the error code, press the MODE key.

Check the standard solution and pH Combined Electrode Sensor, and calibrate again.

If Err□□ (Error output) is selected in [EVT1 type (pp.25 to 27)], and when the error type is “Error” in (Table 8.1.3-1), the EVT1 output will be turned ON.
The same applies to EVT2, EVT3 and EVT4.

If FAIL□ (Fail output) is selected in [EVT1 type (pp.25 to 27)], and when the error type is “Fail” in (Table 8.1.3-1), the EVT1 output will be turned ON.
The same applies to EVT2, EVT3 and EVT4.

(Table 8.1.3-1)

Error Code	Error Type	Error Contents	Description	Occurrence
E-11□	Error	Response Speed Error	When calibrating, the response of the pH Combined Electrode Sensor is slow. When the difference between the input and each of the 1st and 2nd solutions are within pH ±1.50, and input fluctuation is over pH ±0.05 (in 10 seconds of assessment cycles) for 5 minutes, this is assumed to be an error. However, if input fluctuation is less than or equal to pH ±0.05, this is assumed to be within the normal range.	When calibrating
E-12□	Error	Electrode Sensitivity Error	When calibrating, sensitivity of the pH Combined Electrode Sensor has deteriorated. The difference between 1st and 2nd standard solution value after calibration is less than or equal to pH 2.00.	
E-13□	Error	Asymmetry Potential Error	When calibrating pH 7, the difference in electromotive force between the sensor-measured value and standard value exceeds the equivalent of pH ±1.50.	
E-14□	Error	Standard Solution Error	The specified standard solution has not been used. When pH ±1.50 is exceeded for the 1st and 2nd solutions.	
E-15□	Error	Solution Temperature Error	When temperature is 55℃ or more at pH 10 solution.	

Error Code	Error Type	Error Contents	Description	Occurrence
E-21	Fail	Temp. Sensor Burnout	Temperature sensor lead wire is burnt out.	When measuring or calibrating
E-22	Fail	Temp. Sensor Short-circuited	Temperature sensor lead wire is short-circuited.	
E-23	Error	Outside Temp. Compensation Range	Measured temperature has exceeded 110.0℃.	
E-24	Error	Outside Temp. Compensation Range	Measured temperature is less than 0.0℃.	

(Abbreviation: Temp.: Temperature)

8.2 Temperature Calibration Mode

To calibrate a temperature, set a temperature calibration value.

If NoNE (No temperature compensation) is selected in [Electrode RTD (p.24)], Temperature Calibration mode is not available.

The unit cannot enter Temperature Calibration mode in the following cases:
- If Lock 1 (Lock 1), Lock2 (Lock 2) or Lock3 (Lock 3) is selected in [Set value lock (p.34)]
- If cLEO (Cleansing output) is selected in any of [EVT1 to EVT4 types (pp. 25 to 27)], and when cleansing action is performing using the 'Cleansing time' and 'Restore time after cleansing' settings

When a sensor cannot be set at the exact location where measurement is desired, the resulting measured temperature may deviate from the temperature in the desired location. In this case, the desired temperature can be set for the desired location by setting a temperature calibration value. However, it is effective within the input rated range regardless of the temperature calibration value.
Temperature after calibration = Current temperature + (Temperature calibration value)
(e.g.) When current temperature is 23.5℃,
If temperature calibration value is set to 1.5℃: 23.5 + (1.5) = 25.0℃
If temperature calibration value is set to -1.5℃: 23.5 + (-1.5) = 22.0℃

The following outlines the procedure for temperature calibration.

① Press and hold the △ key and MODE key (in that order) together for 3 seconds in pH/Temperature Display Mode, or Cleansing Output Mode.
The unit will proceed to Temperature Calibration mode, indicating the following:

Display	Indicated Contents
pH Display	Indicates to and temperature alternately.
Temperature Display	Temperature calibration value

② Set a temperature calibration value with the △ or ▽ key while checking temperature.
Setting range: -10.0 to 10.0℃

③ Press the SET key.
Temperature calibration is complete, and the unit reverts to pH/Temperature Display Mode, or Cleansing Output Mode.

8.3 Transmission Output 1 Adjustment Mode

Fine adjustment of Transmission output 1 is performed.
This PH meter is adjusted at the factory, however, differences may occur between the indication value of the connected equipment (recorders, etc.) and output value of this unit.
In this case, perform Transmission output 1 Zero and Span adjustments.

The unit cannot enter Transmission output 1 Zero adjustment mode in the following cases:

- During pH calibration or temperature calibration
- When Lock 1 (Lock 1), Lock2 (Lock 2) or Lock3 (Lock 3) is selected in [Set value lock (p.34)]
- When cLEO (Cleansing output) is selected in any of EVT1 to EVT4 types (pp. 25 to 27) using the 'Cleansing time' and 'Restore time after cleansing' settings.

The following outlines Transmission output 1 adjustment procedure.

① Press and hold the △ and SET key (in that order) together for approx. 3 seconds in pH/Temperature Display Mode, or Cleansing Output Mode.
The unit enters Transmission output 1 Zero adjustment mode, and indicates the following:

Display	Indication Contents
pH Display	AJZ 1
Temperature Display	Transmission output 1 Zero adjustment value

② Set Transmission output 1 Zero adjustment value with the △, ▽ keys, while viewing the value indicated on the connected equipment (recorders, etc.).
Setting range: ±5.00% of Transmission output 1 span

③ Press the SET key.
The unit enters Transmission output 1 Span adjustment mode, and indicates the following:

Display	Indication Contents
pH Display	AJ5 1
Temperature Display	Transmission output 1 Span adjustment value

④ Set Transmission output 1 Span adjustment value with the △, ▽ keys, while viewing the value indicated on the connected equipment (recorders, etc.).
Setting range: ±5.00% of Transmission output 1 span

⑤ Press the MODE key.
The unit reverts to the Transmission output 1 Zero adjustment mode.
Repeat steps ② to ⑤ if necessary.

⑥ To finish the Transmission output 1 adjustment, press the SET key in Transmission output 1 Span adjustment mode.
The unit reverts to pH/Temperature Display Mode, or Cleansing Output Mode.

8.4 Transmission Output 2 Adjustment Mode

Fine adjustment of Transmission output 2 is performed.
This PH meter is adjusted at the factory, however, differences may occur between the indication value of the connected equipment (recorders, etc.) and output value of this unit.
In this case, perform Transmission output 2 Zero and Span adjustments.

The unit cannot enter Transmission output 2 Zero adjustment mode in the following cases:

- During pH calibration or temperature calibration
- When Lock1 (Lock 1), Lock2 (Lock 2) or Lock3 (Lock 3) is selected in [Set value lock (p.34)]
- When cLEO (Cleansing output) is selected in any of EVT1 to EVT4 types (pp. 25 to 27) using the 'Cleansing time' and 'Restore time after cleansing' settings.

The following outlines Transmission output 2 adjustment procedure.

① Press and hold the ▽ and SET key (in that order) together for approx. 3 seconds in pH/Temperature Display Mode, or Cleansing Output Mode.
The unit enters Transmission output 2 Zero adjustment mode, and indicates the following:

Display	Indication Contents
pH Display	AJZ2
Temperature Display	Transmission output 2 Zero adjustment value

② Set Transmission output 2 Zero adjustment value with the △, ▽ keys, while viewing the value indicated on the connected equipment (recorders, etc.).
Setting range: ±5.00% of Transmission output 2 span

③ Press the SET key.
The unit enters Transmission output 2 Span adjustment mode, and indicates the following:

Display	Indication Contents
pH Display	AJS2
Temperature Display	Transmission output 2 Span adjustment value

④ Set Transmission output 2 Span adjustment value with the △, ▽ keys, while viewing the value indicated on the connected equipment (recorders, etc.).
Setting range: ±5.00% of Transmission output 2 span

⑤ Press the MODE key.
The unit reverts to the Transmission output 2 Zero adjustment mode.
Repeat steps ② to ⑤ if necessary.

⑥ To finish the Transmission output 2 adjustment, press the SET key in Transmission output 2 Span adjustment mode.
The unit reverts to pH/Temperature Display Mode, or Cleansing Output Mode.

9. Measurement

9.1 Starting Measurement

After mounting to the control panel, and wiring, setup and calibration are complete, turn the power to the instrument ON. For approx. 4 seconds after the power is switched ON, the following characters are indicated on the pH Display and Temperature Display.

Depending on the input specification, indication on the Temperature Display differs as follows:

Pt spec

pH Display	Temperature Display	Item Selected in [Electrode RTD] (p.24)	Item Selected in [Pt100 input wire type] (p.24)
PH□□□	Unlit	NoNE□: No temperature compensation	
	Pt 10□	Pt 10□: Pt1000	
	Pt□2□	Pt 1□□: Pt100	2WI RE: 2-wire type
	Pt□3□		3WI RE: 3-wire type

Cu spec

pH Display	Temperature Display	Item selected in [Electrode RTD (p.24)]
PH□□□	Unlit	NoNE□: No temperature compensation
	cU5□□	cU5□□: Cu500

During this time, all outputs are in OFF status, and action indicators are turned off. After that, measurement starts, indicating the item selected in [Backlight Selection (p. 37)].

9.2 EVT1 to EVT4 Outputs

If PH_L□ (pH input low limit action), PH_H□ (pH input high limit action), TEMPL (Temperature input low limit action) or TEMPH (Temperature input high limit action) is selected in [EVT1 type (pp.25 to 27)], the following action is activated.

The same applies to EVT2, EVT3 and EVT4.

• **EVT1 Action**

<table>
<tr><th>EVT1 Type</th><th>P Control Action</th><th>ON/OFF Control Action</th></tr>
<tr><td rowspan="2">pH input low limit action,
Temperature input low limit action
(Activated based on indication value)</td><td rowspan="2"> 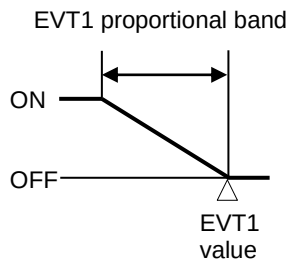
</td><td>If Medium Value is selected in [EVT1 hysteresis type]:
 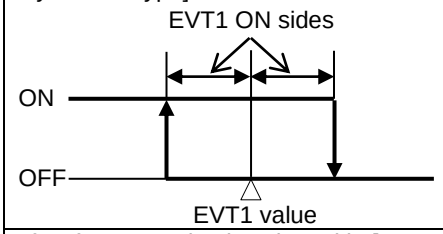
</td></tr>
<tr><td>If Reference Value is selected in [EVT1 hysteresis type]:
 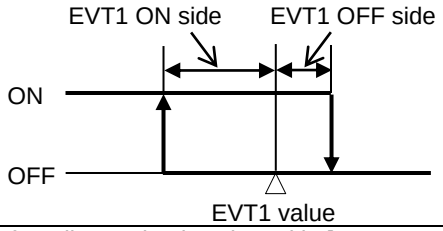
</td></tr>
<tr><td rowspan="2">pH input high limit action,
Temperature input high limit action
(Activated based on indication value)</td><td rowspan="2"> 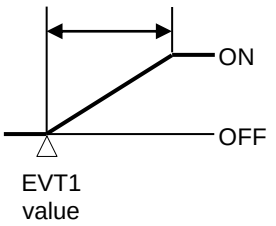
</td><td>If Medium Value is selected in [EVT1 hysteresis type]:
 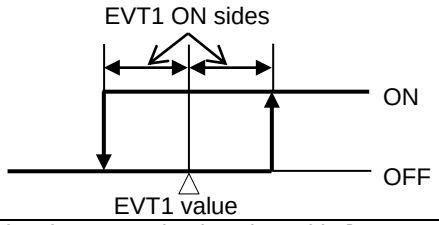
</td></tr>
<tr><td>If Reference Value is selected in [EVT1 hysteresis type]:
 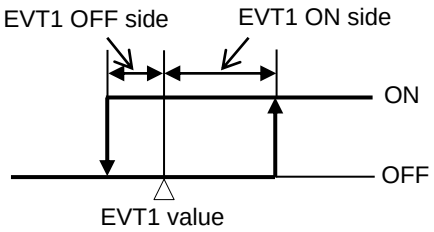
</td></tr>
</table>

EVT1 Type	ON/OFF Control Action
pH input High/Low limits independent action, Temperature input High/Low limits independent	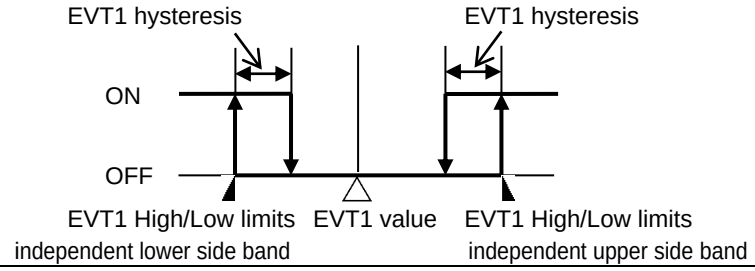

(Fig. 9.2-1)

• **P Control Action**

Within the proportional band, the manipulated variable is output in proportion to the deviation between the EVT1 value and measured value.

EVT1 Type	Description
pH input low limit action, Temperature input low limit action	If measured value is lower than [EVT1 value – EVT1 proportional band], EVT1 output is turned ON. If measured value enters within the proportional band, EVT1 output is turned ON/OFF in EVT1 proportional cycles. If measured value exceeds the EVT1 value, EVT1 output is turned OFF.
pH input high limit action, Temperature input high limit action	If measured value is higher than [EVT1 value + EVT1 proportional band], EVT1 output is turned ON. If measured value enters within the proportional band, EVT1 output is turned ON/OFF in EVT1 proportional cycles. If measured value drops below the EVT1 value, EVT1 output is turned OFF.

• **ON/OFF Control Action**

EVT1 Type	Description
pH input low limit action, Temperature input low limit action	If measured value is lower than EVT1 value, EVT1 output is turned ON. If measured value exceeds the EVT1 value, EVT1 output is turned OFF.
pH input high limit action, Temperature input high limit action	If measured value is higher than EVT1 value, EVT1 output is turned ON. If measured value drops below the EVT1 value, EVT1 output is turned OFF.

If ON and OFF time are set in [Output ON/OFF Time when EVT1 Output ON (pp.29, 30)], and when EVT1 output is turned ON, EVT1 output is turned ON/OFF in a configured cycle.

Timing chart (Output ON time and OFF time when EVT1 output is ON)

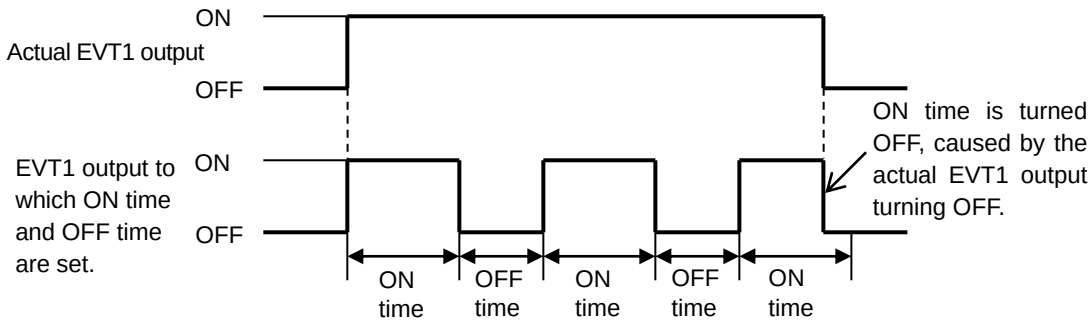

(Fig. 9.2-2)

EVT output status can be read by reading Status flag 2 (EVT1, EVT2, EVT3, EVT4 output flag bit) in Serial communication (C5 option).

EVT output status, when input errors occur, differs depending on the selection in [EVT output when input errors occur (p.39)].

- If oFF (Disabled) is selected, EVT output is turned OFF when input errors occur.
- If oN (Enabled) is selected, EVT output is maintained when input errors occur.

9.3 Error Output

If Err (Error output) is selected in [EVT1 type (pp.25 to 27], and when the error type is “Error” in (Table 8.1.3-1, pp.45, 46), the EVT1 output is turned ON.
The same applies to EVT2, EVT3 and EVT4.

9.4 Fail Output

If FAIL (Fail output) is selected in [EVT1 type (pp.25 to 27)], and when the error type is “Fail” in (Table 8.1.3-1, pp.45, 46), the EVT1 output is turned ON.
The same applies to EVT2, EVT3 and EVT4.

9.5 Cleansing Output

If cLEG (Cleansing output) is selected in any of [EVT1 to EVT4 types (pp. 25 to 27)], the unit will enter Cleansing Output Mode.

An EVT output (for which Cleansing output is selected) will turn ON during the configured cleansing time.

When the cleansing interval finishes after restore time has passed, this is counted as one cleansing cycle, and the configured number of cleansing cycles will be repeated.

While cleansing is being performed, other outputs are in OFF status.

Measured values (pH, temperature) are constantly updated.

Programmed action will be performed, except during cleansing action.

When power is turned ON again, the unit starts from the 1st cleansing cycle.

After the configured number of cleansing cycles is finished, the EVT output (for which the cleansing output is selected) is turned OFF, and other outputs perform their programmed operations, however, they are in Cleansing Output Mode.

• **Cleansing Output Action**

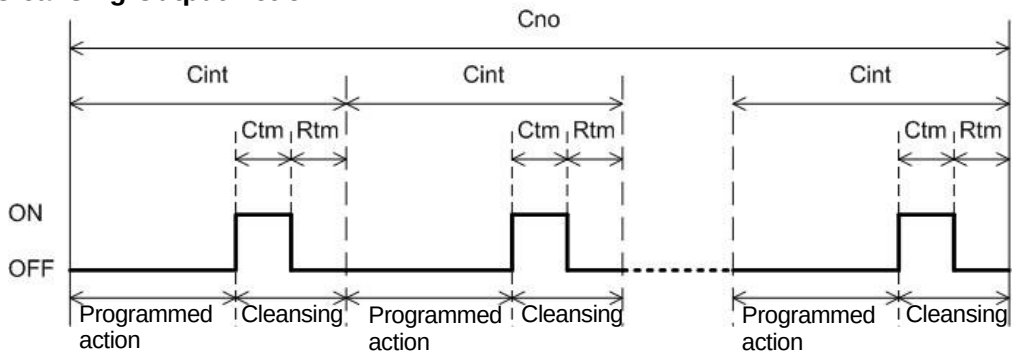

Cno: Number of cleansing cycles
Cint: Cleansing interval
Ctm: Cleansing time
Rtm: Restore time after cleansing

(Fig. 9.5-1)

- If another CLEO (Cleansing output) is selected in any other [EVT type] during cleansing action, the same as the current settings will be used for the cleansing output.
- If NONE (No temperature compensation) is selected in [Electrode RTD (p.24)], the value set in [Reference temperature] is maintained during cleansing action.

If an error occurs [when temperature measured value is outside the measurement range (e.g.) less than 0.0℃ or exceeding 110.0℃], the following will be displayed:

pH Display	Temperature Display
pH measured value	Less than 0.0℃: E-24
pH measured value	Exceeding 110.0℃: E-23

- During calibration mode or Transmission output 1 or 2 adjustment, if cleansing action initiates after restore time has passed, the cleansing action will not be performed in the current session.
- If the number of cleansing cycles is changed in [Number of cleansing cycles] during cleansing action, the new number will be enabled from the next cleansing cycle.

If any output other than CLEO (Cleansing output) is selected in [EVT1 to EVT4 types (pp.25 to 27)], the unit will revert to pH/Temperature Display Mode.

9.6 Manual Cleansing Mode

By pressing the △ and ▽ keys simultaneously for 3 seconds, the unit enters Manual cleansing mode.

In Manual cleansing mode, cleansing action is performed using ‘Cleansing time’ and ‘Restore time after cleansing’.

After manual cleansing action is finished, the unit automatically returns to the Cleansing Output Mode.

If Manual cleansing action initiates during programmed cleansing action, the unit will not enter Manual cleansing mode.

During Manual cleansing mode, if programmed cleansing action initiates after restore time has passed, the programmed cleansing action will not be performed in the current session. Manual cleansing action is also counted as one cleansing cycle.

Manual Cleansing Mode Action

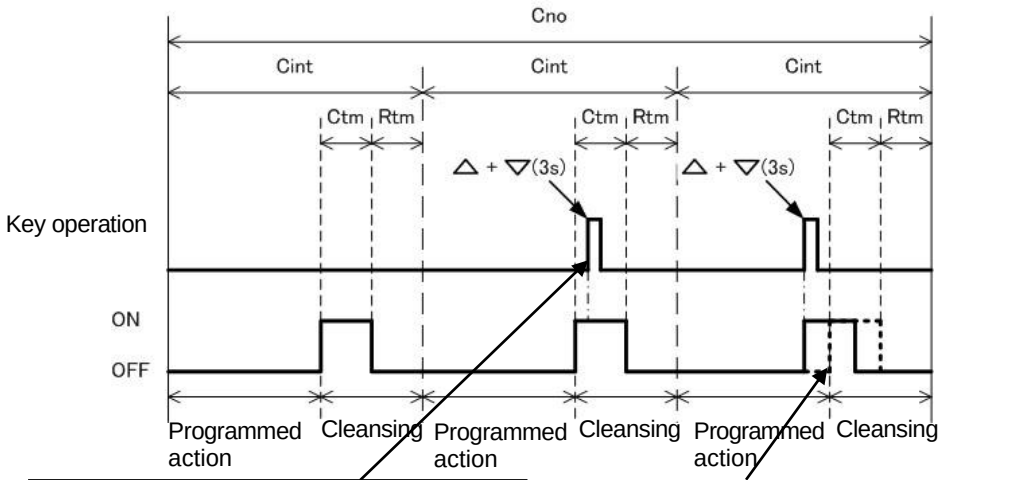

During cleansing action, Manual cleansing mode via key operation is invalidated – Programmed cleansing mode takes priority.

During Manual cleansing mode, the programmed cleansing action will be invalidated.
Cleansing action by Manual cleansing mode is counted as one cleansing cycles.

Cno: Number of cleansing cycles
Cint: Cleansing interval
Ctm: Cleansing time
Rtm: Restore time after cleansing

(Fig. 9.6-1)

9.7 pH Input Error Alarm

pH input error alarm is used for detecting actuator trouble.
Even if pH input error alarm time has elapsed, and if pH input does not become higher than pH input error alarm band, the unit assumes that actuator trouble has occurred, and sets Status flag 2 (EVT1, EVT2, EVT3, EVT4 output flag bit).
In Serial communication, status can be read by reading Status flag 2 (EVT1, EVT2, EVT3, EVT4 output flag bit).
If EPUL□ (pH input error alarm output) is selected in [EVT1 type (pp.25 to 27)], EVT1 output is turned ON.
The same applies to EVT2, EVT3 and EVT4.

pH input error alarm is disabled in the following cases:

- During pH calibration
- When cLEO□ (Cleansing output) is selected in any of EVT1 to EVT4 types (p.25 to 27), and cleansing action is performing using the 'Cleansing time' and 'Restore time after cleansing' settings.
- When pH input error alarm time is set to 0 seconds (or minutes) or pH input error alarm band is set to pH 0.0.

9.8 Cycle Automatic Variable Function

If deviation between EVT□ value and measured value enters EVT□ cycle variable range, the proportional cycle will be automatically extended in accordance with the deviation.

Proportional action OFF time will be extended, and ON / OFF ratio will be adjusted.

However, if EVT□ cycle extended time is set to 0 (zero), this function will be disabled.

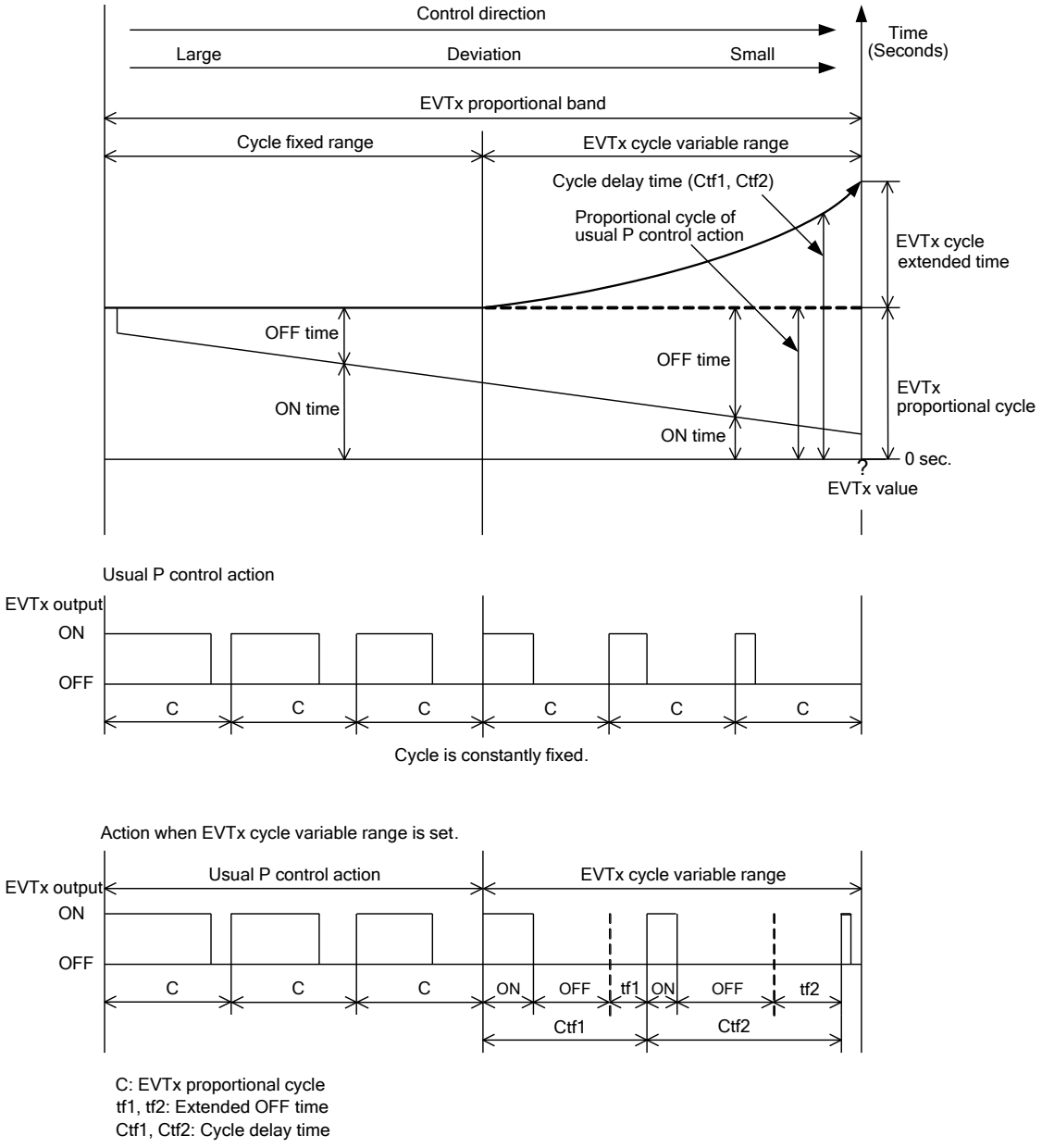

C: EVTx proportional cycle
tf1, tf2: Extended OFF time
Ctf1, Ctf2: Cycle delay time

(Fig. 9.8-1)

9.9 Error Code during Measurement

For temperature sensor error or outside temperature compensation range during measurement, their corresponding error codes flash on the Temperature Display as shown below in (Table 9.9-1).

(Table 9.9-1)

Error Code	Error Type	Error Contents	Description
E-21	Fail	Temperature Sensor Burnout	Temperature sensor lead wire is burnt out.
E-22	Fail	Temperature Sensor Short-circuited	Temperature sensor lead wire is short-circuited.
E-23	Error	Outside Temperature Compensation Range	Measured temperature has exceeded 110.0℃.
E-24	Error	Outside temperature Compensation Range	Measured temperature is less than 0.0℃.

9.10 Setting EVT1 to EVT4 Values

EVT1 to EVT4 values can be set in Simple Setting mode.
These setting items are the same as those in EVT1 to EVT4 Action groups.
To enter Simple Setting mode, follow the procedure below.

① EVT 1 Press the SET key in pH/Temperature Display Mode, or Cleansing Output Mode. 'EVT1 value' will appear.

② Set each item with the △ or ▽ key, and register the value with the SET key.

Character	Setting Item, Function, Setting Range	Factory Default
EVT 1 0.00	**EVT1 value** • Sets EVT1 value. • Not available if ------ (No action), EROUT (Error output), FAIL (Fail output), CLEO (Cleansing output) or EPUL (pH input error alarm output) is selected in [EVT1 type (pp.25 to 27)]. • Not available if Transmission output 2 (TA2 option) is ordered. • Setting range: pH input: pH 0.00 to 14.00 (*) Temperature input: 0.0 to 100.0℃ (*)	pH input: pH 0.00 Temperature input: 0.0℃
EVT2 0.00	**EVT2 value** • Sets EVT2 value. • Not available if ------ (No action), EROUT (Error output), FAIL (Fail output), CLEO (Cleansing output) or EPUL (pH input error alarm output) is selected in [EVT1 type (pp.25 to 27)]. • Setting range: pH input: pH 0.00 to 14.00 (*) Temperature input: 0.0 to 100.0℃ (*)	pH input: pH 0.00 Temperature input: 0.0℃

(*) The placement of the decimal point does not follow the selection. It is fixed.

Character	Setting Item, Function, Setting Range	Factory Default
EVT3 0.00	**EVT3 value**	pH input: pH 0.00 Temperature input: 0.0℃
	• Sets EVT3 value. • Not available if ----- (No action), ERROR (Error output), FAIL (Fail output), CLEO (Cleansing output) or EPUL (pH input error alarm output) is selected in [EVT1 type (pp.25 to 27)]. • Available only when EVT3, EVT4 outputs (EVT3 option) are/is ordered. • Setting range: pH input: pH 0.00 to 14.00 (*) Temperature input: 0.0 to 100.0℃ (*)	
EVT4 0.00	**EVT4 value**	pH input: pH 0.00 Temperature input: 0.0℃
	• Sets EVT4 value. • Not available if ----- (No action), ERROR (Error output), FAIL (Fail output), CLEO (Cleansing output) or EPUL (pH input error alarm output) is selected in [EVT1 type (pp.25 to 27)]. • Available only when EVT3, EVT4 outputs (EVT3 option) are/is ordered. • Setting range: pH input: pH 0.00 to 14.00 (*) Temperature input: 0.0 to 100.0℃ (*)	

(*) The placement of the decimal point does not follow the selection. It is fixed.

③ Press the SET key. The unit reverts to pH/Temperature Display Mode, or Cleansing Output Mode.

9.11 Transmission Output 1 and 2

Converting pH, temperature or MV to analog signal every input sampling period, outputs in current.

If NONE (No temperature compensation) is selected in [Electrode RTD (p.24)], and TEMP (Temperature transmission) is selected in [Transmission output 1 type (p.35)] or [Transmission output 2 type (p.36)], the value set in [Reference temperature (p.23)] will be output.

If Transmission output 1 high limit and low limit are set to the same value, Transmission output 1 will be fixed at 4 mA DC.
If Transmission output 2 high limit and low limit are set to the same value, Transmission output 2 will be fixed at 4 mA DC.

Resolution	12000
Current	4 to 20 mA DC (Load resistance: Max 550 Ω)
Output accuracy	Within ±0.3% of Transmission output 1 or 2 span

9.12 pH Fluctuation Alarm Output

pH fluctuation alarm output is used for detecting pH input fluctuation error.
Even if pH fluctuation alarm time has elapsed – if the change in pH input fluctuation is smaller than the pH fluctuation alarm band – the instrument assumes that a pH fluctuation error has occurred, and sets Status flag 2 (EVT1, EVT2, EVT3, EVT4 output flag bit).
In Serial communication, status can be read by reading Status flag 2 (EVT1, EVT2, EVT3, EVT4 output flag bit).
If EPVA (pH fluctuation alarm output) is selected in [EVT1 type (pp.25 to 27)], the selected EVT1 output will be turned ON.
The same applies to EVT2, EVT3 and EVT4.

This function will be disabled if pH fluctuation alarm time is set to 0 (zero) hours, or if pH fluctuation alarm band is set to pH 0.00.

10. Specifications

10.1 Standard Specifications

Rating

Rated Scale	**Input**		**Input Range**	**Resolution**
	pH Combined Electrode		pH 0.00 to 14.00	pH 0.01
	Pt spec	Pt1000	0.0 to 100.0℃	0.1℃
		Pt100	0.0 to 100.0℃	0.1℃
	Cu spec	Cu500/25℃	0.0 to 100.0℃	0.1℃
Input	pH Combined Electrode Sensor (pH sensor: JIS Z8802, Temperature element: Pt1000 or Pt100) pH Combined Electrode Sensor (pH sensor: JIS Z8802, Temperature element: Cu500/25℃)			
Power Supply Voltage	**Model**		**AER-102-PH**	**AER-102- PH 1**
	Power supply voltage		100 to 240 V AC 50/60 Hz	24 V AC/DC 50/60 Hz
	Allowable voltage fluctuation range		85 to 264 V AC	20 to 28 V AC/DC

General Structure

External Dimensions	48 x 96 x 98.5 mm (W x H x D)	
Mounting	Flush (Applicable panel thickness: 1 to 8 mm)	
Case	Material: Flame-resistant resin, Color: Black	
Front Panel	Membrane sheet	
Drip-proof/Dust-proof	IP66 (for front panel only)	
Indication Structure	Display	
	pH Display	11-segment LCD display 5-digits Backlight: Red/Green/Orange Character size: 14.0 x 5.4 mm (H x W)
	Temperature Display	11-segment LCD display 5-digits Backlight: Green Character size: 10.0 x 4.6 mm (H x W)
	Output Display	22-segment LCD display Bar graph Backlight: Green
	Action indicator: Backlight: Orange color	
	EVT1	When EVT1 output (Contact output 1) ON: Lit
	EVT2	When EVT2 output (Contact output 2) ON: Lit
	EVT3	When EVT3 output (Contact output 3) ON: Lit
	EVT4	When EVT4 output (Contact output 4) ON: Lit
	T/R	When Serial communication TX output (transmitting): Lit
	LOCK	When Lock 1, 2 or 3 is selected: Lit
Setting Structure	Input system using membrane sheet key	

Indication Performance

Repeatability	pH: pH ±0.05
Linearity	pH: pH ±0.05
Indication Accuracy	Temperature: ±1℃
Input Sampling Period	125 ms (2 inputs)
Time Accuracy	Within ±1% of setting time

Standard Functions

<table>
<tr><td colspan="2">pH Calibration</td><td colspan="2">For pH measurement using the glass electrode method, pH in the sensor location, electrode performance and standard solution accuracy respectively play an important role for obtaining reliable data.
Input value is shifted via 2-points calibration using the standard solutions.
However, it is effective within the input rated range regardless of the calibration value.
There are 2 calibration methods: Automatic Calibration, Manual Calibration</td></tr>
<tr><td colspan="2">Temperature Calibration</td><td colspan="2">When a sensor cannot be set at the exact location where measurement is desired, the resulting measured temperature may deviate from the temperature in the desired location. In this case, the desired temperature can be set for the desired location by setting a temperature calibration value. However, it is effective within the input rated range regardless of the temperature calibration value.</td></tr>
<tr><td colspan="2" rowspan="4">Transmission Output 1</td><td colspan="2">Converting pH, temperature or MV to analog signal every input sampling periods, outputs the value in current.
If NonE (No temperature compensation) is selected in [Electrode RTD (p.24)], and if TEMP (Temperature transmission) is selected in [Transmission output 1 type (p.35)], the value set in [Reference temperature (p.24)] will be output.
If Transmission output 1 high limit and low limit are set to the same value, Transmission output 1 will be fixed at 4 mA DC.</td></tr>
<tr><td>Resolution</td><td>12000</td></tr>
<tr><td>Output</td><td>4 to 20 mA DC (Load resistance: Max 550 Ω)</td></tr>
<tr><td>Output accuracy</td><td>Within ±0.3% of Transmission output 1 span</td></tr>
<tr><td></td><td>Transmission Output 1 Adjustment</td><td colspan="2">Fine adjustment of Transmission output 1 is performed by performing Transmission output 1 Zero and Span adjustments.</td></tr>
<tr><td></td><td>Transmission Output 1 Status when Calibrating</td><td colspan="2">Selects Transmission output 1 status when calibrating pH.
Last value HOLD: Retains the last value before pH calibration, and outputs it.
Set value HOLD: Outputs the value set in [Transmission output 1 value HOLD when calibrating].
Measured value: Outputs the measured value when calibrating pH.</td></tr>
</table>

<table>
<tr><td colspan="2">EVT Output</td><td colspan="3"></td></tr>
<tr><td></td><td>Output Action</td><td colspan="3">P control: When setting proportional band to any value other than 0.00 or 0.0.
ON/OFF control: When setting proportional band to 0.00 or 0.0.</td></tr>
<tr><td></td><td></td><td rowspan="2">EVT□ proportional band</td><td>pH input</td><td>pH 0.00 to 14.00 (*)</td></tr>
<tr><td></td><td></td><td>Temperature input</td><td>0.0 to 100.0℃ (*)</td></tr>
<tr><td></td><td></td><td colspan="2">EVT□ proportional cycle</td><td>1 to 300 seconds</td></tr>
<tr><td></td><td></td><td rowspan="2">EVT□ ON side, OFF side</td><td>pH input</td><td>pH 0.00 to 4.00 (*)</td></tr>
<tr><td></td><td></td><td>Temperature input</td><td>0.0 to 10.0℃ (*)</td></tr>
<tr><td></td><td></td><td colspan="2">EVT□ output high limit, low limit</td><td>0 to 100%</td></tr>
<tr><td></td><td></td><td rowspan="2">EVT□ H/L limits independent upper, lower side bands</td><td>pH input</td><td>pH 0.00 to 14.00 (*)</td></tr>
<tr><td></td><td></td><td>Temperature input</td><td>0.0 to 100.0℃ (*)</td></tr>
<tr><td></td><td></td><td rowspan="2">EVT□ hysteresis</td><td>pH input</td><td>pH 0.01 to 4.00 (*)</td></tr>
<tr><td></td><td></td><td>Temperature input</td><td>0.1 to 10.0℃ (*)</td></tr>
<tr><td></td><td></td><td colspan="3">(*) The placement of the decimal point does not follow the selection. It is fixed.</td></tr>
<tr><td></td><td>Type</td><td colspan="3">Selectable by the keypad from the following.
• No action
• pH input low limit action
• pH input high limit action
• Temperature input low limit action
• Temperature input high limit action
• Error output
• Fail output
• Cleansing output
• pH input error alarm
• pH fluctuation alarm output
• pH input High/Low limits independent action
• Temperature input High/Low limits independent action</td></tr>
<tr><td></td><td>Output</td><td colspan="3">Relay contact 1a</td></tr>
<tr><td></td><td></td><td>Control capacity</td><td colspan="2">3 A 250 V AC resistive load)
1 A 250 V AC (inductive load, cosϕ=0.4)</td></tr>
<tr><td></td><td></td><td>Electrical life</td><td colspan="2">100,000 cycles</td></tr>
<tr><td></td><td>EVT□ ON Delay Time</td><td colspan="3">0 to 10000 seconds</td></tr>
<tr><td></td><td>EVT□ OFF Delay Time</td><td colspan="3">0 to 10000 seconds</td></tr>
<tr><td></td><td>Output ON Time/ OFF Time when EVT□ Output ON</td><td colspan="3">If ON time and OFF time are set, the output can be turned ON/OFF in a configured cycle when EVT□ output is ON.</td></tr>
</table>

	Cleansing Output	**Cleansing output mode** If cLEO (Cleansing output) is selected in any of [EVT1 to EVT4 types (pp. 25 to 27)], the unit will enter Cleansing Output Mode. An EVT output (for which Cleansing output is selected) will turn ON during the configured cleansing time. When the cleansing interval finishes after restore time has passed, this is counted as one cleansing cycle, and the configured number of cleansing cycles will be repeated. While cleansing is being performed, other outputs are in OFF status. Measured values (pH, temperature) are retained. Programmed action will be performed, except during cleansing action. When power is turned ON again, starts from the 1st cleansing action again. After the configured number of cleansing cycles is finished, the EVT output (for which the cleansing output is selected) is turned OFF, and other outputs perform their programmed operations, however, they are in Cleansing Output Mode. **Manual cleansing mode** By pressing the △ and ▽ keys simultaneously for 3 seconds, the unit enters Manual cleansing mode. In Manual cleansing mode, cleansing action is performed using 'Cleansing time' and 'Restore time after cleansing'. After manual cleansing action is finished, the unit automatically returns to the Cleansing Output Mode. During cleansing action, Manual cleansing mode via key operation is invalidated, and the unit cannot enter Manual cleansing mode. During Manual cleansing mode, if programmed cleansing action initiates after restore time has passed, the programmed cleansing action will not be performed in the current session.
	pH Input Error Alarm	Detects actuator trouble. Even if pH input error alarm time has elapsed, and if pH input does not become higher than pH input error alarm band, the unit assumes that actuator trouble has occurred, and sets Status flag 2 (EVT1, EVT2, EVT3, EVT4 output flag bit). In Serial communication, status can be read by reading Status flag 2 (EVT1, EVT2, EVT3, EVT4 output flag bit). If EPUL (pH input error alarm output) is selected in [EVT1 type (pp.25 to 27)], EVT1 output is turned ON. The same applies to EVT2, EVT3 and EVT4. pH input error alarm is disabled in the following cases: • During pH calibration • When cLEO (Cleansing output) is selected in any of EVT1 to EVT4 types (pp.25 to 27), and when cleansing action is performed using the 'Cleansing time' and 'Restore time after cleansing'. • When pH input error alarm time is set to 0 seconds (or minutes) or pH input error alarm band is set to pH 0.0.

	Cycle Automatic Variable Function	If deviation between EVT□ value and measured value enters EVT□ cycle variable range, the proportional cycle will be automatically extended in accordance with the deviation. Proportional action OFF time will be extended, and ON/OFF ratio will be adjusted. However, if EVT□ cycle extended time is set to 0 (zero) seconds, this function will be disabled.

Insulation, Dielectric Strength

Circuit Insulation Configuration	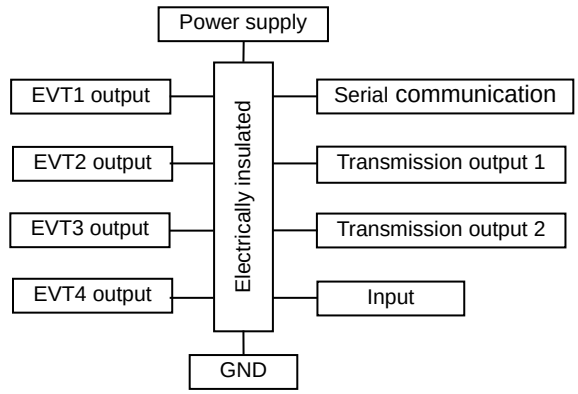 Insulation resistance: 10 MΩ or more, at 500 V DC
Dielectric Strength	Power terminal - ground (GND): 1.5 kV AC for 1 minute Input terminal - ground (GND): 1.5 kV AC for 1 minute Input terminal - power terminal: 1.5 kV AC for 1 minute

Attached Functions

Set Value Lock	Lock 1: None of the set values can be changed. Lock 2: Only EVT1, EVT2, EVT3 and EVT4 values can be changed. Lock 3: All set values – except Electrode RTD, Temperature calibration value, pH calibration value, pH calibration Auto/Manual, Transmission output 1 Zero and Span adjustment values, Transmission output 2 Zero and Span adjustment values – can be temporarily changed. However, they revert to their previous value after the power is turned off because they are not saved in the non-volatile IC memory.
pH Input Sensor Correction	This corrects the input value from the pH Combined Electrode Sensor. When sensor-measured pH may deviate from the pH in the measured location, desired pH can be obtained by adding a sensor correction value. However, it is effective within the measurement range regardless of the sensor correction value.
Temperature Display when No Temperature Compensation	If NONE (No temperature compensation) is selected in [Electrode RTD (p.24)], the item to be indicated on the Temperature Display can be selected.
Cable Length Correction	If 2WIRE (2-wire type) is selected in [Pt100 input wire type (p.24)], and if sensor cable is too long, temperature measurement error will occur due to cable resistance. This can be corrected by setting the cable length correction value and cable cross-section area.

<table>
<tr><td>Outside Measurement Range</td><td>When pH measured value or temperature measured value is outside the measurement range, the following will be indicated. However, when pH measured value is outside the measurement range, and if the unit proceeds to pH Calibration mode, the pH Display will be unlit, and the Temperature Display will flash oF□□□.
When temperature errors occur, and if the unit proceeds to pH Manual Calibration mode, the pH Display will be unlit, and the Temperature Display will flash an error code.

pH measured value is outside the measurement range:
If the value is less than pH 0.00, or exceeds pH 14.00, the following will be indicated.
• When NoNE□ (No temperature compensation) is selected in [Electrode RTD (p.24)]:
<table>
<tr><th>pH Display</th><th>Temperature Display</th></tr>
<tr><td>Less than pH 0.00: 0.00</td><td>oF□□□ is flashing.</td></tr>
<tr><td>Exceeding pH 14.00: 14.00</td><td>oF□□□ is flashing.</td></tr>
</table>
• Pt spec: When Pt 100□ (Pt1000) or Pt 1□□ (Pt100) is selected in [Electrode RTD (p.24)]
• Cu spec: When cu5□□ (Cu500) is selected in [Electrode RTD (p.24)]:
<table>
<tr><th>pH Display</th><th>Temperature Display</th></tr>
<tr><td>Less than pH 0.00:
0.00 is flashing.</td><td>Temperature measured value</td></tr>
<tr><td>Exceeding pH 14.00:
14.00 is flashing.</td><td>Temperature measured value</td></tr>
</table>
• When temperature measured value is outside the measurement range (less than 0.0℃ or exceeding 110.0℃), the following will be indicated:
<table>
<tr><th>pH Display</th><th>Temperature Display</th></tr>
<tr><td>pH measured value</td><td>Less than 0.0℃: E-24□</td></tr>
<tr><td>pH measured value</td><td>Exceeding 110.0℃: E-23□</td></tr>
</table></td></tr>
<tr><td>Power Failure Countermeasure</td><td>The setting data is backed up in the non-volatile IC memory.</td></tr>
<tr><td>Self-diagnosis</td><td>The CPU is monitored by a watchdog timer, and if an abnormal status occurs, the AER-102-PH is switched to warm-up status.</td></tr>
<tr><td>Bar Graph Indication</td><td>When rAnG 1 (Transmission output 1) or rAnG2 (Transmission output 2) is selected in [Bar graph indication (p.39], segments light in accordance with the output.
Scale is -5 to 105%. Segments light from left to the right in accordance with the output.
(e.g.) When the output is 50%
 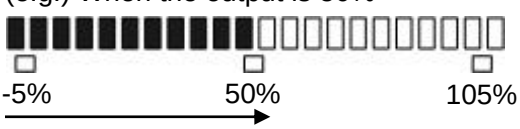

Light from left to right in accordance with the output.</td></tr>
</table>

Warm-up Indication

For approx. 4 seconds after the power is switched ON, the characters below are indicated on the pH Display and Temperature Display.
Indication on the Temperature Display differs depending on the input specification as follows.

Pt spec

pH Display	Temperature Display	Item selected in [Electrode RTD (p.24)]	Item selected in [Pt100 input wire type (p.24)]
PH□□□	Unlit	NoNE□: No temperature compensation	
	Pt 100□	Pt 100□: Pt1000	
	Pt□2□	Pt 1□□: Pt100	2WI RE: 2-wire type
	Pt□3□		3WI RE: 3-wire type

Cu spec

pH Display	Temperature Display	Item selected in [Electrode RTD (p.24)]
PH□□□	Unlit	NoNE□ : No temperature compensation
	cU5□□	cU5□□: Cu500

pH Color Selection

Selects pH Display color.

Item selected in [pH Color (p.38)]	pH Display Color
GRN□□	Green
REd□□	Red
oRG□□	Orange
PHGR□	pH color changes continuously.

pH color changes continuously:
pH Display color changes according to [pH color reference value (p.38)] and [pH color range (p.38)] settings.
- When pH is lower than [pH color reference value] – [pH color range]: Orange
- When pH is within [pH color reference value] ± [pH color range]: Green
- When pH is higher than [pH color reference value] + [pH color range]: Red

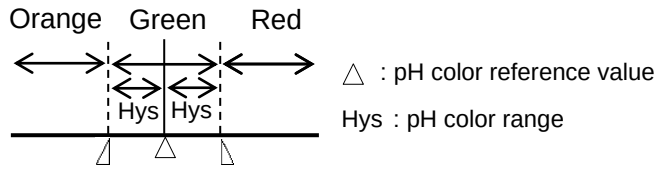

Zero Indication

Indicates potential difference when pH 7 is calibrated. However, if Manual calibration is performed, zero indication value calculated at previous automatic calculation will not be updated.
If calibration is not successfully completed, zero indication will show the value before calibration.

Slope Indication

From the voltage equivalent to the calibrated pH, electro-motive force for the change of pH 1 will be indicated.
If calibration is not successfully completed, slope indication will show the value before calibration.

Error Code	Error codes below flash on the Temperature Display.			
Error Code	**Error Type**	**Error Contents**	**Description**	**Occur-rence**
E- 11	Error	Response Speed Error	When calibrating, the response of the pH Combined Electrode Sensor is slow. When the difference between the input and each of the 1st and 2nd solutions are within pH ±1.50, and input fluctuation is over pH ±0.05 (in 10 seconds of assessment cycles) for 5 minutes, this is assumed to be an error. However, if input fluctuation is less than or equal to pH ±0.05, this is assumed to be within the normal range.	When calibrat-ing
E- 12	Error	Electrode Sensitivity Error	When calibrating, sensitivity of the pH Combined Electrode Sensor has deteriorated. The difference between 1st and 2nd standard solution value after calibration is less than or equal to pH 2.00.	
E- 13	Error	Asymmetry Potential Error	When calibrating pH 7, the difference in electromotive force between the sensor-measured value and standard value exceeds the equivalent of pH ±1.50.	
E- 14	Error	Standard Solution Error	The specified standard solution has not been used. When pH ±1.50 is exceeded for the 1st and 2nd solutions.	
E- 15	Error	Solution temp. Error	When temperature is 55℃ or more at pH 10 solution.	
E-21	Fail	Temp. Sensor Burnout	Temperature sensor lead wire is burnt out.	When measur-ing or calibrat-ing
E-22	Fail	Temp. Sensor Short-circuited	Temperature sensor lead wire is short-circuited.	
E-23	Error	Outside Temp. Compen.Range	Measured temperature has exceeded 110.0℃.	
E-24	Error	Outside Temp. Compen.Range	Measured temperature is less than 0.0℃.	

(Abbreviations: Temp.: Temperature, Compen.: Compensation)

Other

Power Consumption	Approx. 12 VA
Ambient Temperature	0 to 50℃ (32 to 122℉)
Ambient Humidity	35 to 85 %RH (Non-condensing)
Weight	Approx. 280 g
Altitude	2,000 m or less
Accessories Included	Unit label: 1 sheet, Mounting brackets: 1 set Instruction manual: 1 copy When Serial communication (C5 option) is ordered: Wire harness C5J (0.2 m): 1 length Wire harness C0J (3 m): 1 length When EVT3, EVT4 outputs (Contact output 3, 4) (EVT3 option) are/is ordered: Wire harness HBJ (3 m): 2 lengths
Accessories Sold Separately	Terminal cover

10.2 Optional Specifications

Serial Communication (Option code: C5)

Serial Communication		The following operations can be carried out from an external computer. (1) Reading and setting of various set values (2) Reading of the pH, temperature and status (3) Function change, adjustment (4) Reading and setting of user save area			
	Cable Length	1.2 km (Max), Cable resistance: Within 50 Ω (Terminators are not necessary, but if used, use 120 Ω minimum on both sides.)			
	Communication Line	EIA RS-485			
	Communication Method	Half-duplex communication			
	Communication Speed	9600, 19200, 38400 bps (Selectable by keypad)			
	Synchronization Method	Start-stop synchronization			
	Code Form	ASCII, Binary			
	Communication Protocol	Shinko protocol, MODBUS ASCII, MODBUS RTU (Selectable by keypad)			
	Data Bit/Parity	8 bits/No parity, 7 bits/No parity, 8 bits/Even, 7 bits/Even, 8 bits/Odd, 7 bits/Odd (Selectable by keypad)			
	Stop Bit	1 bit, 2 bits (Selectable by keypad)			
	Error Correction	Command request repeat system			
	Error Detection	Parity check, Checksum (Shinko protocol), LRC (MODBUS protocol ASCII), CRC-16 (MODBUS protocol RTU)			
	Data Format	**Communication Protocol**	**Shinko Protocol**	**MODBUS ASCII**	**MODBUS RTU**
		Start bit	1	1	1
		Data bit	7	7 (8) Selectable	8
		Parity	Even	Even (No parity, Odd) Selectable	No parity (Even, Odd) Selectable
		Stop bit	1	1 (2) Selectable	1 (2) Selectable

EVT3, EVT4 Outputs (Contact output 3, 4) (Option code: EVT3)

EVT3, EVT4 Outputs (Contact output 3, 4)	Same as EVT output (pp.61 to 63)

Transmission Output 2 (Option Code: TA2)

Transmission Output 2	Converting pH, temperature or MV to analog signal every input sampling period, and outputs the value in current. If nonE (No temperature compensation) is selected in [Electrode RTD (p.24)], and if TEMP (Temperature transmission) is selected in [Transmission output 2 type (p.36)], the value set in [Reference temperature (p.24)] will be output. If Transmission output 2 high limit and low limit are set to the same value, Transmission output 2 will be fixed at 4 mA DC.		
		Resolution	12000
		Current	4 to 20 mA DC (Load resistance: Max 550 Ω)
		Output accuracy	Within ±0.3% of Transmission output 2 Span
	Transmission Output 2 Adjustment	Fine adjustment of Transmission output 2 can be performed via Transmission output 2 Zero adjustment and Span adjustment.	
	Transmission Output 2 Status when Calibrating	Transmission output 2 status can be selected when calibrating pH. Last value HOLD: Retains the last value before pH calibration, and outputs it. Set value HOLD: Outputs the value set in [Transmission output 2 value HOLD when calibrating]. Measured value: Outputs the measured value when calibrating pH.	

11. Troubleshooting

If any malfunction occurs, refer to the following items after checking that power is being supplied to the AER-102-PH.

11.1 Indication

Problem	Possible Cause	Solution
The pH/ Temperature Displays are unlit.	The time set in [Backlight time (p.38)] has passed.	If any key is pressed while displays are unlit, it will re-light. Set the backlight time to a suitable time-frame.
Indication of the pH/Temperature Display is unstable or irregular.	pH calibration and temperature calibration may not have finished.	Perform pH calibration and temperature calibration.
	Electrode RTD selection might not be correct.	Select a correct electrode RTD.
	Specification of pH Combined Electrode Sensor may not be suitable.	Replace the sensor with a suitable one.
	There may be equipment that interferes with or makes noise near the AER-102-PH.	Keep AER-102-PH clear of any potentially disruptive equipment. Try [Grounding of shield wire terminal (E) (P.70)].

Problem	Possible Cause	Solution
The Temperature Display is unlit.	oFF (Unlit) is selected in [Temperature Display when no temperature compensation (p.39)].	Select Std (Reference temperature).
[E-11] is flashing on the Temperature Display.	This shows that the response of the pH Combined Electrode Sensor is slow when calibrating.	Rinse the pH Combined Electrode Sensor. If [E-11] is still flashing, check if the standard solution and pH Combined Electrode Sensor are normal. If they are not normal, replace the solution or the sensor.
[E-12] is flashing on the Temperature Display.	When calibrating, this occurs when the pH Combined Electrode Sensor has deteriorated.	Rinse the pH Combined Electrode Sensor, and refill the internal solution. If [E-12] is still flashing, replace the sensor.
[E-13] is flashing on the Temperature Display.	When calibrating, this occurs when electromotive force (asymmetry potential) of pH 7 is large.	Rinse the pH Combined Electrode Sensor, and refill the internal solution. If [E-13] is still flashing, replace the sensor.
[E-14] is flashing on the Temperature Display.	When calibrating, this will occur if the specified standard solution is not used.	Rinse the pH Combined Electrode Sensor, and refill the internal solution. If [E-14] is still flashing, use the specified standard solution.
[E-15] is flashing on the Temperature Display.	When calibrating, this will occur if temperature of pH 10 is 55℃ or more.	Check the liquid temperature of pH 10.
[E-21] is flashing on the Temperature Display.	This occurs when the temperature sensor lead wire is burnt out.	Replace the pH Combined Electrode Sensor.
[E-22] is flashing on the Temperature Display.	This occurs when the temperature sensor lead wire is short-circuited.	Replace the pH Combined Electrode Sensor.
[E-23] is flashing on the Temperature Display.	This occurs when measured temperature value exceeds 110.0℃.	Check the measuring environment.
[E-24] is flashing on the Temperature Display.	This occurs when measured temperature value is less than 0.0℃.	Check the measuring environment.
[ERR1] is flashing on the pH Display.	Internal memory is defective.	Contact our agency or us.

11.2 Key Operation

Problem	Possible Cause	Solution
• Unable to set values. • The values do not change by △, ▽ keys.	Lock 1 (Lock 1) or Lock2 (Lock 2) is selected in [Set value lock (p.34)]. (When Lock 1 or Lock 2 is selected, the LOCK indicator is lit.)	Select ----- (Unlock).
Unable to enter Manual cleansing mode.	cLEO (Cleansing output) is not selected in any of [EVT1 to EVT4 types (pp. 25 to 27)].	Select cLEO (Cleansing output) in any of [EVT1 to EVT4 types (pp. 25 to 27)].
	Cleansing action is performing using the 'Cleansing time' and 'Restore time after cleansing' settings.	Execute Manual cleansing after Cleansing action is completed.
Unable to enter a calibration mode (pH Calibration mode or Temperature Calibration mode).	Lock 1 (Lock 1), Lock2 (Lock 2) or Lock3 (Lock 3) has been selected in [Set value lock (p.34)]. (The LOCK indicator is lit when Lock 1, Lock 2 or Lock 3 is selected.)	Select ----- (Unlock).
	cLEO (Cleansing output) has been selected in any of [EVT1 to EVT4 types (pp. 25 to 27)], and cleansing action is performing using the 'Cleansing Time' and 'Restore Time after Cleansing' settings.	Perform calibration after cleansing action is completed.

・Grounding of shield wire terminal (E)
If the indication fluctuates due to noise, ground the shield wire terminal (E).
However, depending on the installation environment, the symptom may not be improved.
In this case, disconnect the grounding of the shield wire terminal (E) and return it to the original state.
(Depending on the type of sensor, the cable for the shield wire terminal (E) may not be available.)

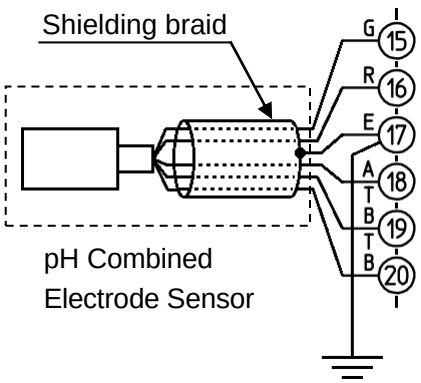

12. Character Tables

The following shows our character tables. Use data column for your reference.

12.1 Setting Group List

Character	Setting Group	Reference Section
FNc.1	pH input group	12.7 (p.72)
FNc.2	Temperature input group	12.8 (p.73)
EVT.a.1	EVT1 action group	12.9 (pp.73 to 75)
EVT.a.2	EVT2 action group	12.10 (pp.76 to 78)
EVT.a.3	EVT3 action group	12.11 (pp.78 to 80)
EVT.a.4	EVT4 action group	12.12 (pp.80 to 82)
a.T.E.R	Basic function group	12.13 (pp.83 to 86)
ZR.SR	Zero/Slope indication group	12.14 (p.86)

12.2 Temperature Calibration Mode

Character	Setting Item, Setting Range	Factory Default	Data
to (*) 00.0	**Temperature calibration value** Setting range: -10.0 to 10.0℃	0.0℃	

(*) to and temperature are displayed alternately.

12.3 pH Calibration Mode (for Manual calibration)

Character	Setting Item, Setting Range	Factory Default	Data
-1- (*) 0.00	**pH calibration value** Setting range: -7.00 to 7.00	0.00	

(*) -1- and pH are displayed alternately.

12.4 Transmission Output 1 Adjustment Mode

Character	Setting Item, Setting Range	Factory Default	Data
AJZ 1 0.00	**Transmission output 1 Zero adjustment value** Setting range: ±5.00% of Transmission output 1 span	0.00%	
AJS 1 0.00	**Transmission output 1 Span adjustment value** Setting range: ±5.00% of Transmission output 1 span	0.00%	

12.5 Transmission Output 2 Adjustment Mode

Character	Setting Item, Setting Range	Factory Default	Data
AJZ2 0.00	**Transmission output 2 Zero adjustment value** Setting range: ±5.00% of Transmission output 2 span	0.00%	
AJS2 0.00	**Transmission output 2 Span adjustment value** Setting range: ±5.00% of Transmission output 2 span	0.00%	

12.6 Simple Setting Mode

Character	Setting Item, Setting Range	Factory Default	Data
EVT 1 0.00	**EVT1 value** pH input: pH 0.00 to 14.00 Temperature input: 0.0 to 100.0℃	pH input: pH 0.00 Temperature input: 0.0℃	
EVT2 0.00	**EVT2 value** pH input: pH 0.00 to 14.00 Temperature input: 0.0 to 100.0℃	pH input: pH 0.00 Temperature input: 0.0℃	
EVT3 0.00	**EVT3 value** pH input: pH 0.00 to 14.00 Temperature input: 0.0 to 100.0℃	pH input: pH 0.00 Temperature input: 0.0℃	
EVT4 0.00	**EVT4 value** pH input: pH 0.00 to 14.00 Temperature input: 0.0 to 100.0℃	pH input: pH 0.00 Temperature input: 0.0℃	

12.7 pH Input Group

Character	Setting Item, Setting Range	Factory Default	Data
TYPE JIS	**pH 7 calibration standard** JIS : JIS US : US standard	JIS	
SEPH PH4	**2nd solution** PH2 : pH 2 PH4 : pH 4 PH9 : pH 9 PH 10 : pH 10	pH 4	
ADJT AUTo	**pH calibration Auto/Manual** AUTo : Automatic MANU : Manual	Automatic	
dP 1 0.00	**Decimal point place** 0 : No decimal point 0.0 : 1 digit after decimal point 0.00 : 2 digits after decimal point	2 digits after decimal point	
FILT 0.0	**pH input filter time constant** Setting range: 0.0 to 60.0 seconds	0.0 seconds	
PSo 0.00	**pH input sensor correction** Setting range: -1.40 to 1.40	0.00	
dFcT 20	**pH inputs for moving average** Setting range: 1 to 120	20	

12.8 Temperature Input Group

Character	Setting Item, Setting Range	Factory Default	Data
SENS Pt 100	**Electrode RTD** **Pt spec** NoNE : No temperature compensation Pt 100 : Pt1000 Pt 1□□ : Pt100 **Cu spec** NoNE : No temperature compensation cU5□□ : Cu500	Pt spec: Pt1000 Cu spec: Cu500	
STNd □□25.0	**Reference temperature** Setting range: 5.0 to 95.0℃	25.0℃	
dP2□□ □□□0.0	**Decimal point place** □□□□0 : No decimal point □□□0.0 : 1 digit after decimal point	1 digit after decimal point	
cNEcT 3WI RE	**Pt100 input wire type** 2WI RE : 2-wire type 3WI RE : 3-wire type	3 -wire type	
cAbLE □□□0.0	**Cable length correction** Setting range: 0.0 to 100.0 m	0.0 m	
cSEc□ □□0.30	**Cable cross-section area** Setting range: 0.10 to 2.00 mm^2	0.30 mm^2	
dFcT□ □□□20	**Temperature inputs for moving average** Setting range: 1 to 120	20	

12.9 EVT1 Action Group

Character	Setting Item, Setting Range	Factory Default	Data
EVT 1F ------	**EVT1 type** ------: No action PH_L□: pH input low limit action PH_H□: pH input high limit action TEMPL: Temperature input low limit action TEMPH: Temperature input high limit action ERoUT: Error output FAI L□: Fail output cLEO□: Cleansing output EPUL□: pH input error alarm output EPVA□: pH fluctuation alarm output PH_HL: pH input High/Low limits independent action TEMHL: Temperature input High/Low limits independent action	No action	

Character	Setting Item, Setting Range	Factory Default	Data
EVV 1 □□0.00	**EVT1 value** pH input: pH 0.00 to 14.00 Temperature input: 0.0 to 100.0℃	pH input: pH 0.00 Temperature input: 0.0℃	
EP 1□□ □□0.00	**EVT1 proportional band** pH input: pH 0.00 to 14.00 Temperature input: 0.0 to 100.0℃	pH input: pH 0.00 Temperature input: 0.0℃	
E 1RVr □□0.00	**EVT1 reset** pH input: pH ±4.00 Temperature input: ±10.0℃	pH input: pH 0.00 Temperature input: 0.0℃	
E 1dl F Vdl F□	**EVT1 hysteresis type** cdl F□: Medium Value Vdl F□: Reference Value	Reference Value	
E 1dFo □□0.10	**EVT1 ON side** pH input: pH 0.00 to 4.00 Temperature input: 0.0 to 10.0℃	pH input: pH 0.10 Temperature input: 1.0℃	
E 1dFU □□0.10	**EVT1 OFF side** pH input: pH 0.00 to 4.00 Temperature input: 0.0 to 10.0℃	pH input: pH 0.10 Temperature input: 1.0℃	
E 1oNr □□□□0	**EVT1 ON delay time** Setting range: 0 to 10000 sec	0 sec.	
E 1oFr □□□□0	**EVT1 OFF delay time** Setting range: 0 to 10000 sec	0 sec.	
E 1c□□ □□□30	**EVT1 proportional cycle** Setting range: 1 to 300 sec	30 sec.	
E 1oLH □□ 100	**EVT1 output high limit** Setting range: EVT1 output low limit to 100%	100%	
E 1oLL □□□□0	**EVT1 output low limit** Setting range: 0% to EVT1 output high limit	0%	
ooNr 1 □□□□0	**Output ON time when EVT1 output ON** Setting range: 0 to 10000 sec	0 sec.	
ooFr 1 □□□□0	**Output OFF time when EVT1 output ON** Setting range: 0 to 10000 sec	0 sec.	

Character	Setting Item, Setting Range	Factory Default	Data
E 1c4□ ------	**EVT1 pH input error alarm EVT□ type** ------ : No action EVT2□ : EVT2 type EVT3□ : EVT3 type EVT4□ : EVT4 type	No action	
E 1Pa□ □□0.00	**EVT1 pH input error alarm band when EVT□ output ON** Setting range: pH 0.00 to 14.00	pH 0.00	
E 1Pat □□□□0	**EVT1 pH input error alarm time when EVT□ output ON** Setting range: 0 to 10000 seconds or minutes	0 sec.	
E 1Pc□ □□0.00	**EVT1 pH input error alarm band when EVT□ output OFF** Setting range: pH 0.00 to 14.00	pH 0.00	
E 1Pct □□□□0	**EVT1 pH input error alarm time when EVT□ output OFF** Setting range: 0 to 10000 seconds or minutes	0 sec.	
MVZN 1 □□50.0	**EVT1 cycle variable range** Setting range: 1.0 to 100.0%	50.0%	
cENT 1 □□□□0	**EVT1 cycle extended time** Setting range: 0 to 300 seconds	0 sec.	
E 1PAt □□□□0	**EVT1 pH fluctuation alarm time** Setting range: 0 to 72 hours	0 hours	
E 1PAH □□0.00	**EVT1 pH fluctuation alarm band** Setting range: pH 0.00 to 14.00	pH 0.00	
E 1_L□ □□0.00	**EVT1 High/Low limits independent lower side band** pH input: pH 0.00 to 14.00 Temperature input: 0.0 to 100.0℃	pH input: pH 0.00 Temperature input: 0.0℃	
E 1_H□ □□0.00	**EVT1 High/Low limits independent upper side band** pH input: pH 0.00 to 14.00 Temperature input: 0.0 to 100.0℃	pH input: pH 0.00 Temperature input: 0.0℃	
E 1_HY □□0.10	**EVT1 hysteresis** pH input: pH 0.00 to 4.00 Temperature input: 0.0 to 10.0℃	pH input: pH 0.10 Temperature input: 1.0℃	

12.10 EVT2 Action Group

Character	Setting Item, Setting Range	Factory Default	Data
EVT2F ------	**EVT2 type** ------: No action PH_L□: pH input low limit action PH_H□: pH input high limit action TEMPL: Temperature input low limit action TEMPH: Temperature input high limit action ERoUT: Error output FAI L□: Fail output cLEG□: Cleansing output EPUL□: pH input error alarm output EPVA□: pH fluctuation alarm output PH_HL: pH input High/Low limits independent action TEMHL: Temperature input High/Low limits independent action	No action	
E1V2□ □□0.00	**EVT2 value** pH input: pH 0.00 to 14.00 Temperature input: 0.0 to 100.0℃	pH input: pH 0.00 Temperature input: 0.0℃	
EP2□□ □□0.00	**EVT2 proportional band** pH input: pH 0.00 to 14.00 Temperature input: 0.0 to 100.0℃	pH input: pH 0.00 Temperature input: 0.0℃	
E2R1T □□0.00	**EVT2 reset** pH input: pH ±4.00 Temperature input: ±10.0℃	pH input: pH 0.00 Temperature input: 0.0℃	
E2dI F 1dI F□	**EVT2 hysteresis type** cdI F□: Medium Value 1dI F□: Reference Value	Reference Value	
E2dFo □□0.10	**EVT2 ON side** pH input: pH 0.00 to 4.00 Temperature input: 0.0 to 10.0℃	pH input: pH 0.10 Temperature input: 1.0℃	
E2dFU □□0.10	**EVT2 OFF side** pH input: pH 0.00 to 4.00 Temperature input: 0.0 to 10.0℃	pH input: pH 0.10 Temperature input: 1.0℃	
E2oNT □□□□0	**EVT2 ON delay time** Setting range: 0 to 10000 sec	0 sec.	
E2oFT □□□□0	**EVT2 OFF delay time** Setting range: 0 to 10000 sec	0 sec.	
E2c□□ □□□30	**EVT2 proportional cycle** Setting range: 1 to 300 sec	30 sec.	

Character	Setting Item, Setting Range	Factory Default	Data
E2oLH □□ 100	**EVT2 output high limit** Setting range: EVT2 output low limit to 100%	100%	
E2oLL □□□□0	**EVT2 output low limit** Setting range: 0% to EVT2 output high limit	0%	
ooNT2 □□□□0	**Output ON time when EVT2 output ON** Setting range: 0 to 10000 sec	0 sec.	
ooFT2 □□□□0	**Output OFF time when EVT2 output ON** Setting range: 0 to 10000 sec	0 sec.	
E2c4□ ------	**EVT2 pH input error alarm EVT□ type** EVT 1□ : EVT1 type ------ : No action EVT 3□ : EVT3 type EVT 4□ : EVT4 type	No action	
E2Po□ □□0.00	**EVT2 pH input error alarm band when EVT□ output ON** Setting range: pH 0.00 to 14.00	pH 0.00	
E2Pot □□□□0	**EVT2 pH input error alarm time when EVT□ output ON** Setting range: 0 to 10000 seconds or minutes	0 sec.	
E2Pc□ □□0.00	**EVT2 pH input error alarm band when EVT□ output OFF** Setting range: pH 0.00 to 14.00	pH 0.00	
E2Pct □□□□0	**EVT2 pH input error alarm time when EVT□ output OFF** Setting range: 0 to 10000 seconds or minutes	0 sec.	
MVZN2 □□50.0	**EVT2 cycle variable range** Setting range: 1.0 to 100.0%	50.0%	
cENT2 □□□□0	**EVT2 cycle extended time** Setting range: 0 to 300 seconds	0 sec.	
E2PAt □□□□0	**EVT2 pH fluctuation alarm time** Setting range: 0 to 72 hours	0 hours	
E2PAH □□0.00	**EVT2 pH fluctuation alarm band** Setting range: pH 0.00 to 14.00	pH 0.00	
E2_L□ □□0.00	**EVT2 High/Low limits independent lower side band** pH input: pH 0.00 to 14.00 Temperature input: 0.0 to 100.0℃	pH input: pH 0.00 Temperature input: 0.0℃	

Character	Setting Item, Setting Range	Factory Default	Data
E2_H□ □□0.00	**EVT2 High/Low limits independent upper side band** pH input: pH 0.00 to 14.00 Temperature input: 0.0 to 100.0℃	pH input: pH 0.00 Temperature input: 0.0℃	
E2_HY □□0.10	**EVT2 hysteresis** pH input: pH 0.00 to 4.00 Temperature input: 0.0 to 10.0℃	pH input: pH 0.10 Temperature input: 1.0℃	

12.11 EVT3 Action Group

Available only when EVT3, EVT4 outputs (EVT3 option) are/is ordered.

Character	Setting Item, Setting Range	Factory Default	Data
EVT3F ------	**EVT3 type** ------: No action PH_L□: pH input low limit action PH_H□: pH input high limit action TEMPL: Temperature input low limit action TEMPH: Temperature input high limit action ERoUT: Error output FAIL□: Fail output cLEG□: Cleansing output EPUL□: pH input error alarm output EPVR□: pH fluctuation alarm output PH_HL: pH input High/Low limits independent action TEMHL: Temperature input High/Low limits independent action	No action	
E3V3□ □□0.00	**EVT3 value** pH input: pH 0.00 to 14.00 Temperature input: 0.0 to 100.0℃	pH input: pH 0.00 Temperature input: 0.0℃	
EP3□□ □□0.00	**EVT3 proportional band** pH input: pH 0.00 to 14.00 Temperature input: 0.0 to 100.0℃	pH input: pH 0.00 Temperature input: 0.0℃	
E3RST □□0.00	**EVT3 reset** pH input: pH ±4.00 Temperature input: ±10.0℃	pH input: pH 0.00 Temperature input: 0.0℃	
E3dIF SdIF□	**EVT3 hysteresis type** cdIF□: Medium Value SdIF□: Reference Value	Reference Value	

Character	Setting Item, Setting Range	Factory Default	Data
E3dFo □□0.10	**EVT3 ON side** pH input: pH 0.00 to 4.00 Temperature input: 0.0 to 10.0℃	pH input: pH 0.10 Temperature input: 1.0℃	
E3dFU □□0.10	**EVT3 OFF side** pH input: pH 0.00 to 4.00 Temperature input: 0.0 to 10.0℃	pH input: pH 0.10 Temperature input: 1.0℃	
E3oNr □□□□0	**EVT3 ON delay time** Setting range: 0 to 10000 sec	0 sec.	
E3oFr □□□□0	**EVT3 OFF delay time** Setting range: 0 to 10000 sec	0 sec.	
E3c□□ □□□30	**EVT3 proportional cycle** Setting range: 1 to 300 sec	30 sec.	
E3oLH □□ 100	**EVT3 output high limit** Setting range: EVT3 output low limit to 100%	100%	
E3oLL □□□□0	**EVT3 output low limit** Setting range: 0% to EVT3 output high limit	0%	
ooNr3 □□□□0	**Output ON time when EVT3 output ON** Setting range: 0 to 10000 sec	0 sec.	
ooFr3 □□□□0	**Output OFF time when EVT3 output ON** Setting range: 0 to 10000 sec	0 sec.	
E3c4□ ------	**EVT3 pH input error alarm EVT□ type** EVT 1□ : EVT1 type EVT2□ : EVT2 type ------ : No action EVT4□ : EVT4 type	No action	
E3Po□ □□0.00	**EVT3 pH input error alarm band when EVT□ output ON** Setting range: pH 0.00 to 14.00	pH 0.00	
E3Por □□□□0	**EVT3 pH input error alarm time when EVT□ output ON** Setting range: 0 to 10000 seconds or minutes	0 sec.	
E3Pc□ □□0.00	**EVT3 pH input error alarm band when EVT□ output OFF** Setting range: pH 0.00 to 14.00	pH 0.00	

Character	Setting Item, Setting Range	Factory Default	Data
E3Pcr □□□□0	**EVT3 pH input error alarm time when EVT□ output OFF** Setting range: 0 to 10000 seconds or minutes	0 sec.	
MVZN3 □□50.0	**EVT3 cycle variable range** Setting range: 1.0 to 100.0%	50.0%	
cENr3 □□□□0	**EVT3 cycle extended time** Setting range: 0 to 300 seconds	0 sec.	
E3PAr □□□□0	**EVT3 pH fluctuation alarm time** Setting range: 0 to 72 hours	0 hours	
E3PAH □□0.00	**EVT3 pH fluctuation alarm band** Setting range: pH 0.00 to 14.00	pH 0.00	
E3_L□ □□0.00	**EVT3 High/Low limits independent lower side band** pH input: pH 0.00 to 14.00 Temperature input: 0.0 to 100.0℃	pH input: pH 0.00 Temperature input: 0.0℃	
E3_H□ □□0.00	**EVT3 High/Low limits independent upper side band** pH input: pH 0.00 to 14.00 Temperature input: 0.0 to 100.0℃	pH input: pH 0.00 Temperature input: 0.0℃	
E3_HY □□0.10	**EVT3 hysteresis** pH input: pH 0.00 to 4.00 Temperature input: 0.0 to 10.0℃	pH input: pH 0.10 Temperature input: 1.0℃	

12.12 EVT4 Action Group

Available only when EVT3, EVT4 outputs (EVT3 option) are/is ordered.

Character	Setting Item, Setting Range	Factory Default	Data
EVT4F -----	**EVT4 type** -----: No action PH_L□: pH input low limit action PH_H□: pH input high limit action rEMPL: Temperature input low limit action rEMPH: Temperature input high limit action ERoUr: Error output FAI L□: Fail output cLEG□: Cleansing output EPUL□: pH input error alarm output EPVA□: pH fluctuation alarm output PH_HL: pH input High/Low limits independent action rEMHL: Temperature input High/Low limits independent action	No action	

Character	Setting Item, Setting Range	Factory Default	Data
E4V4 □□0.00	**EVT4 value** pH input: pH 0.00 to 14.00 Temperature input: 0.0 to 100.0℃	pH input: pH 0.00 Temperature input: 0.0℃	
EP4□□ □□0.00	**EVT4 proportional band** pH input: pH 0.00 to 14.00 Temperature input: 0.0 to 100.0℃	pH input: pH 0.00 Temperature input: 0.0℃	
E4RST □□0.00	**EVT4 reset** pH input: pH ±4.00 Temperature input: ±10.0℃	pH input: pH 0.00 Temperature input: 0.0℃	
E4dI F SdI F□	**EVT4 hysteresis type** cdI F□: Medium Value SdI F□: Reference Value	Reference Value	
E4dFo □□0.10	**EVT4 ON side** pH input: pH 0.00 to 4.00 Temperature input: 0.0 to 10.0℃	pH input: pH 0.10 Temperature input: 1.0℃	
E4dFU □□0.10	**EVT4 OFF side** pH input: pH 0.00 to 4.00 Temperature input: 0.0 to 10.0℃	pH input: pH 0.10 Temperature input: 1.0℃	
E4oNT □□□□0	**EVT4 ON delay time** Setting range: 0 to 10000 sec	0 sec.	
E4oFT □□□□0	**EVT4 OFF delay time** Setting range: 0 to 10000 sec	0 sec.	
E4c□□ □□□30	**EVT4 proportional cycle** Setting range: 1 to 300 sec	30 sec.	
E4oLH □□ 100	**EVT4 output high limit** Setting range: EVT4 output low limit to 100%	100%	
E4oLL □□□□0	**EVT4 output low limit** Setting range: 0% to EVT4 output high limit	0%	
ooNT4 □□□□0	**Output ON time when EVT4 output ON** Setting range: 0 to 10000 sec	0 sec.	
ooFT4 □□□□0	**Output OFF time when EVT4 output ON** Setting range: 0 to 10000 sec	0 sec.	

Character	Setting Item, Setting Range	Factory Default	Data
E4c4□ ------	**EVT4 pH input error alarm EVT□ type** EVT 1□ : EVT1 type EVT2□ : EVT2 type EVT3□ : EVT3 type ------ : No action	No action	
E4Pa□ □□0.00	**EVT4 pH input error alarm band when EVT□ output ON** Setting range: pH 0.00 to 14.00	pH 0.00	
E4PaT □□□□0	**EVT4 pH input error alarm time when EVT□ output ON** Setting range: 0 to 10000 seconds or minutes	0 sec.	
E4Pc□ □□0.00	**EVT4 pH input error alarm band when EVT□ output OFF** Setting range: pH 0.00 to 14.00	pH 0.00	
E4PcT □□□□0	**EVT4 pH input error alarm time when EVT□ output OFF** Setting range: 0 to 10000 seconds or minutes	0 sec.	
MVZN4 □□50.0	**EVT4 cycle variable range** Setting range: 1.0 to 100.0%	50.0%	
cENT4 □□□□0	**EVT4 cycle extended time** Setting range: 0 to 300 seconds	0 sec.	
E4PAT □□□□0	**EVT4 pH fluctuation alarm time** Setting range: 0 to 72 hours	0 hours	
E4PAH □□0.00	**EVT4 pH fluctuation alarm band** Setting range: pH 0.00 to 14.00	pH 0.00	
E4_L□ □□0.00	**EVT4 High/Low limits independent lower side band** pH input: pH 0.00 to 14.00 Temperature input: 0.0 to 100.0℃	pH input: pH 0.00 Temperature input: 0.0℃	
E4_H□ □□0.00	**EVT4 High/Low limits independent upper side band** pH input: pH 0.00 to 14.00 Temperature input: 0.0 to 100.0℃	pH input: pH 0.00 Temperature input: 0.0℃	
E4_HY □□0.10	**EVT4 hysteresis** pH input: pH 0.00 to 4.00 Temperature input: 0.0 to 10.0℃	pH input: pH 0.10 Temperature input: 1.0℃	

12.13 Basic Function Group

Character	Setting Item, Setting Range	Factory Default	Data
LocK ------	**Set value lock** ------: Unlock Lock 1: Lock 1 Lock2: Lock 2 Lock3: Lock 3	Unlock	
cMtL NoML	**Communication protocol** NoML: Shinko protocol ModA: MODBUS ASCII mode ModR: MODBUS RTU mode	Shinko protocol	
cMNo 0	**Instrument number** Setting range: 0 to 95	0	
cMtP 96	**Communication speed** 96: 9600 bps 192: 19200 bps 384: 38400 bps	9600 bps	
cMFT 7EvN	**Data bit/Parity** 8NoN: 8 bits/No parity 7NoN: 7 bits/No parity 8EvN: 8 bits/Even 7EvN: 7 bits/Even 8odd: 8 bits/Odd 7odd: 7 bits/Odd	7 bits/Even	
cMtT 1	**Stop bit** 1: 1 bit 2: 2 bits	1 bit	
TRn1 PH	**Transmission output 1 type** PH : pH transmission TEMP : Temperature transmission MV1 : EVT1 MV transmission MV2 : EVT2 MV transmission MV3 : EVT3 MV transmission MV4 : EVT4 MV transmission	pH transmission	
TRLH1 14.00	**Transmission output 1 high limit** pH transmission: Transmission output 1 low limit to pH 14.00 Temperature transmission: Transmission output 1 low limit to 100.0℃ MV transmission: Transmission output 1 low limit to 100.0%	pH transmission: pH 14.00 Temperature transmission: 100.0℃ MV transmission: 100.0%	

Character	Setting Item, Setting Range	Factory Default	Data
TRLL1 □□0.00	**Transmission output 1 low limit**	pH transmission: pH 0.00 Temperature transmission: 0.0℃ MV transmission: 0.0%	
	pH transmission: pH 0.00 to Transmission output 1 high limit Temperature transmission: 0.0℃ to Transmission output 1 high limit MV transmission: 0.0% to Transmission output 1 high limit		
TRoH2 TEMP□	**Transmission output 2 type**	Temperature transmission	
	PH□□□ : pH transmission TEMP□ : Temperature transmission MV2□□ : EVT2 MV transmission MV3□□ : EVT3 MV transmission MV4□□ : EVT4 MV transmission		
TRLH2 □100.0	**Transmission output 2 high limit**	pH transmission: pH 14.00 Temperature transmission: 100.0℃ MV transmission: 100.0%	
	pH transmission: Transmission output 2 low limit to pH 14.00 Temperature transmission: Transmission output 2 low limit to 100.0℃ MV transmission: Transmission output 2 low limit to 100.0%		
TRLL2 □□□0.0	**Transmission output 2 low limit**	pH transmission: pH 0.00 Temperature transmission: 0.0℃ MV transmission: 0.0%	
	pH transmission: pH 0.00 to Transmission output 2 high limit Temperature transmission: 0.0℃ to Transmission output 2 high limit MV transmission: 0.0% to Transmission output 2 high limit		
TRcH1 bEFH□	**Transmission output 1 status when calibrating**	Last value HOLD	
	bEFH: Last value HOLD HEIH: Set value HOLD PVH□: Measured value		
TRHE1 □□0.00	**Transmission output 1 value HOLD when calibrating**	pH transmission: pH 0.00 Temperature transmission: 0.0℃ MV transmission: 0.0%	
	pH transmission: pH 0.00 to 14.00 Temperature transmission: 0.0 to 100.0℃ MV transmission: 0.0 to 100.0%		
TRcH2 bEFH□	**Transmission output 2 status when calibrating**	Last value HOLD	
	bEFH: Last value HOLD HEIH: Set value HOLD PVH□: Measured value		

Character	Setting Item, Setting Range	Factory Default	Data
tR4E2 □□00	**Transmission output 2 value HOLD when calibrating** pH transmission: pH 0.00 to 14.00 Temperature transmission: 0.0 to 100.0℃ MV transmission: 0.0 to 100.0%	pH transmission: pH 0.00 Temperature transmission: 0.0℃ MV transmission: 0.0%	
bKLT□ ALL□□	**Backlight selection** ALL□□: All are backlit. PH□□□: pH Display TEMP□: Temperature Display Ac□□□: Action indicators PHTMP: pH Display + Temperature Display PHAc□: pH Display + Action indicators TMPAc: Temperature Display + Action indicators	All are backlit.	
coLR□ REd□□	**pH color** GRN□□: Green REd□□: Red oRG□□: Orange PHGR□: pH color changes continuously.	Red	
cLP□□ □□7.00	**pH color reference value** Setting range: pH 0.00 to 14.00	pH 7.00	
cLRG□ □□2.00	**pH color range** Setting range: pH 0.10 to 14.00	pH 2.00	
dPTM□ □□□□0	**Backlight time** Setting range: 0 to 99 minutes	0 minutes	
bER4L ------	**Bar graph selection** ------: No indication TRoT 1: Transmission output 1 TRoT2: Transmission output 2	No indication	
INERR oFF□□	**EVT output when input errors occur** oFF□□: Disabled oN□□□: Enabled	Disabled	
oFdP□ oFF□□	**Temperature Display when no temperature compensation** oFF□□: Unlit 4Td□□: Reference temperature	Unlit	
ccNT□ □□□□0	**Number of cleansing cycles** Setting range: 0 to 10 (0: Continuous cleansing)	0 (Continuous cleansing)	
ccYc□ □□360	**Cleansing interval** Setting range: 60 to 3000 minutes	360 minutes	

Character	Setting Item, Setting Range	Factory Default	Data
cTIM □□600	**Cleansing time** Setting range: 1 to 1800 seconds	600 sec.	
cREc□ □□600	**Restore time after cleansing** Setting range: 1 to 1800 seconds	600 sec.	
cch1□ bEFH□	**Transmission output 1 status when cleansing** bEFH□: Last value HOLD hErH□: Set value HOLD PVH□□: Measured value	Last value HOLD	
ch E1□ □□0.00	**Transmission output 1 value HOLD when cleansing** pH transmission: pH 0.00 to 14.00 Temperature transmission: 0.0 to 100.0℃ MV transmission: 0.0 to 100.0%	pH transmission: pH 0.00 Temperature transmission: 0.0℃ MV transmission: 0.0%	
cch2□ bEFH□	**Transmission output 2 status when cleansing** bEFH□: Last value HOLD hErH□: Set value HOLD PVH□□: Measured value	Last value HOLD	
ch E2□ □□□0.0	**Transmission output 2 value HOLD when cleansing** pH transmission: pH 0.00 to 14.00 Temperature transmission: 0.0 to 100.0℃ MV transmission: 0.0 to 100.0%	pH transmission: pH 0.00 Temperature transmission: 0.0℃ MV transmission: 0.0%	
M_h□□ hEc□□	**pH input error alarm time unit** hEc□□ : Second(s) MIN□□ : Minute(s)	Second(s)	

12.14 Zero/Slope Indication Group

Character	Setting Item, Indication Range	Factory Default	Data
ZERo□ □□□0.0	**Zero indication** Indication range: Voltage equivalent to pH ±1.5	0.0 mV	
hLoP□ □□59.2	**Slope indication** Indication range: Voltage equivalent to pH 0.00 to 14.00	59.2 mV	

12.15 Error Code List

If any error occurs, its error code will flash on the Temperature Display.

Error Code	Error Type	Error Contents	Description	Occurrence
E- 11	Error	Response Speed Error	When calibrating, the response of the pH Combined Electrode Sensor is slow. When the difference between the input and each of the 1st and 2nd solutions are within pH ±1.50, and input fluctuation is over pH ±0.05 (in 10 seconds of assessment cycles) for 5 minutes, this is assumed to be an error. However, if input fluctuation is less than or equal to pH ±0.05, this is assumed to be within the normal range.	When calibrating
E- 12	Error	Electrode Sensitivity Error	When calibrating, sensitivity of the pH Combined Electrode Sensor has deteriorated. The difference between 1st and 2nd standard solution value after calibration is less than or equal to pH 2.00.	
E- 13	Error	Asymmetry Potential Error	When calibrating pH 7, the difference in electromotive force between the sensor-measured value and standard value exceeds the equivalent of pH ±1.50.	
E- 14	Error	Standard Solution Error	The specified standard solution has not been used. When pH ±1.50 is exceeded for the 1st and 2nd solutions.	
E- 15	Error	Solution Temperature Error	When temperature is 55℃ or more at pH 10 solution.	
E-21	Fail	Temp. Sensor Burnout	Temperature sensor lead wire is burnt out.	When measuring or calibrating
E-22	Fail	Temp. Sensor Short-circuited	Temperature sensor lead wire is short-circuited.	
E-23	Error	Outside Temp. Compensation Range	Measured temperature has exceeded 110.0℃.	
E-24	Error	Outside Temp. Compensation Range	Measured temperature is less than 0.0℃.	

(Abbreviation: Temp: Temperature)

***** Inquiries *****

For any inquiries about this unit, please contact our agency or the vendor where you purchased the unit after checking the following.

[Example]

- Model ---------- AER-102-PH
- Serial number ---------- No. 195F05000

In addition to the above, please let us know the details of the malfunction, or discrepancy, and the operating conditions.

SHINKO TECHNOS CO., LTD.

OVERSEAS DIVISION

Head Office: 2-5-1, Senbahigashi, Minoo, Osaka, 562-0035, Japan

[URL] https://shinko-technos.co.jp/e/ Tel: +81-72-727-6100

[E-mail] overseas@shinko-technos.co.jp Fax: +81-72-727-7006

No. AER11PHE10 2025.04