Plug-in Type

Digital Indicating Conductivity Meter

WIL-102-ECL (Low Concentration)

Instruction Manual

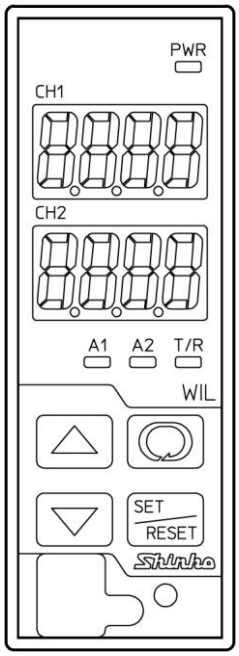

Shinko

Preface

Thank you for purchasing our WIL-102-ECL (Low Concentration), Plug-in Type Digital Indicating Conductivity Meter.

This manual contains instructions for the mounting, functions, operations and notes when operating the WIL-102-ECL. To ensure safe and correct use, thoroughly read and understand this manual before using this instrument. To prevent accidents arising from the misuse of this instrument, please ensure the operator receives this manual.

Characters Used in This Manual

Indication	-1	0	1	2	3	4	5	6	7	8	9	℃	℉
Number, ℃/℉	-1	0	1	2	3	4	5	6	7	8	9	℃	℉
Indication	A	b	c	d	E	F	G	H	I	J	K	L	M
Alphabet	A	B	C	D	E	F	G	H	I	J	K	L	M
Indication	n	o	P	q	r	S	T	U	V	W	X	Y	Z
Alphabet	N	O	P	Q	R	S	T	U	V	W	X	Y	Z

⚠ Caution

- This instrument should be used in accordance with the specifications described in the manual. If it is not used according to the specifications, it may malfunction or cause a fire.
- Be sure to follow all of the warnings, cautions and notices. If they are not observed, serious injury or malfunction may occur.
- The contents of this instruction manual are subject to change without notice.
- Care has been taken to ensure that the contents of this instruction manual are correct, but if there are any doubts, mistakes or questions, please inform our sales department.
- This instrument is designed to be installed on a DIN rail in an indoor control panel. If it is not, measures must be taken to ensure that the operator cannot touch power terminals or other high voltage sections.
- Any unauthorized transfer or copying of this document, in part or in whole, is prohibited.
- Shinko Technos CO., LTD. is not liable for any damage or secondary damage(s) incurred as a result of using this product, including any indirect damage.

Safety Precautions **(Be sure to read these precautions before using our products.)**

The safety precautions are classified into 2 categories: “Warning” and “Caution”. Depending on the circumstances, procedures indicated by ⚠ Caution may result in serious consequences, so be sure to follow the directions for usage.

⚠ Warning Procedures which may lead to dangerous conditions and cause death or serious injury, if not carried out properly.

⚠ Caution Procedures which may lead to dangerous conditions and cause superficial to medium injury or physical damage or may degrade or damage the product, if not carried out properly.

⚠ Warning

- To prevent an electrical shock or fire, only Shinko or other qualified service personnel may handle the inner assembly.
- To prevent an electrical shock, fire or damage to the instrument, parts replacement may only be undertaken by Shinko or other qualified service personnel.

⚠ SAFETY PRECAUTIONS

- To ensure safe and correct use, thoroughly read and understand this manual before using this instrument.
- This instrument is intended to be used for measuring equipment. Verify correct usage after purpose-of-use consultation with our agency or main office. (Never use this instrument for medical purposes with which human lives are involved.)
- External protection devices such as protective equipment against excessive temperature rise, etc. must be installed, as malfunction of this product could result in serious damage to the system or injury to personnel. Proper periodic maintenance is also required.
- This instrument must be used under the conditions and environment described in this manual. Shinko Technos Co., Ltd. does not accept liability for any injury, loss of life or damage occurring due to the instrument being used under conditions not otherwise stated in this manual.

Warning on Model Label

⚠ Caution

Failure to handle this instrument properly may result in minor or moderate injury or property damage due to fire, malfunction, malfunction, or electric shock. Please read this manual before using the product to ensure that you fully understand the product.

⚠ Caution with Respect to Export Trade Control Ordinance

To avoid this instrument from being used as a component in, or as being utilized in the manufacture of weapons of mass destruction (i.e. military applications, military equipment, etc.), please investigate the end users and the final use of this instrument. In the case of resale, ensure that this instrument is not illegally exported.

PRECAUTIONS

1. Installation Precautions

⚠ Caution

This instrument is intended to be used under the following environmental conditions (IEC61010-1):

- Overvoltage category Ⅱ, Pollution degree 2

Ensure the mounting location corresponds to the following conditions:

- A minimum of dust, and an absence of corrosive gases
- No flammable, explosive gases
- No mechanical vibrations or shocks
- No exposure to direct sunlight, an ambient temperature of 0 to 50℃ (32 to 122℉) that does not change rapidly, and no icing
- An ambient non-condensing humidity of 35 to 85 %RH
- No large capacity electromagnetic switches or cables through which large current is flowing
- No water, oil, chemicals or the vapors of these substances can come into direct contact with the unit.
- If the WIL-102-ECL is installed within a control panel, the ambient temperature of the unit – not the ambient temperature of the control panel – must be kept under 50℃. Otherwise the life of electronic parts (especially electrolytic capacitors) of the unit will be shortened.

Note: Do not install this instrument on or near flammable material even though the case of this instrument is made of flame-resistant resin.

⚠ Caution

- Do not leave wire remnants in the instrument, as they could cause a fire and/or a malfunction.
- Use a solderless terminal with an insulation sleeve in which the M3 screw fits when wiring the WIL-102-ECL.
- Tighten the terminal screw using the specified torque. If excessive force is applied to the screw when tightening, the terminal screw may be damaged.
- This instrument does not have a built-in power switch, circuit breaker and fuse.
  It is necessary to install a power switch, circuit breaker and fuse near the instrument.
  (Recommended fuse: Time-lag fuse, rated voltage 250 V AC, rated current 2 A)
- For a 24 V AC/DC power source, do not confuse polarity when using direct current (DC).
- Do not apply a commercial power source to the sensor which is connected to the input terminal nor allow the power source to come into contact with the sensor.
- Use the 2-electrode Conductivity Sensor in accordance with the sensor input specifications of the WIL-102-ECL.
- Keep the input wires and power lines separate.

Note about the 2-Electrode Conductivity Sensor Cable

The 2-electrode Conductivity Sensor cable is a highly-insulated (electrical) cable. Please handle it with utmost care as follows.

- The 2-electrode Conductivity Sensor cable should be wired directly to the socket.
- Do not allow terminals and socket of the 2-electrode Conductivity Sensor cable to come in contact with moisture or oil of any kind. Likewise, ensure fingers are clean, otherwise the insulation will deteriorate, resulting in unstable indication.
  Be sure to keep the cable dry and clean at all times.
  If the cable is stained, clean it with alcohol, and dry it completely.
- For calibration or electrode checking/replacement, the 2-electrode Conductivity Sensor cable should be wired with sufficient length.
- Keep the 2-electrode Conductivity Sensor cable and junction cable away from electrical devices, such as motors or their power lines from which inductive interference emanates.

Connection

The 2-electrode Conductivity Sensor cable has the following terminals.

Code	Terminal
1	Conductivity sensor terminal 2
2	Conductivity sensor terminal 3
A, B (T, T)	Temperature compensation sensor terminals [Pt100 (2-wire), Pt1000] 5-6
A, B, B	Temperature compensation sensor terminals [Pt100 (3-wire)] 5-6-7
E	Shield wire terminal 8

For the electrode with no temperature compensation, A, B (T, T) or A, B, B cables are not available. E cables are available depending on the sensor type.

During operation, the Conductivity/Temperature Display may become abnormal or unstable due to inductive interference or noise. In this case, try [Grounding of shield wire terminal (E) (P.77)].

3. Operation and Maintenance Precautions

⚠ Caution

- Do not touch live terminals. This may cause an electrical shock or problems in operation.
- Turn the power supply to the instrument OFF when retightening the terminal or cleaning.
  Working on or touching the terminal with the power switched ON may result in severe injury or death due to electrical shock.
- Use a soft, dry cloth when cleaning the instrument.
  (Alcohol based substances may tarnish or deface the unit.)
- As the display section is vulnerable, be careful not to put pressure on, scratch or strike it with a hard object.

4. Compliance with Safety Standards

⚠ Caution

- Always install the recommended fuse described in this manual externally.
- If the instrument is used in a manner not specified by the manufacturer, the protection provided by the instrument may be impaired.
- Use a device with reinforced insulation or double insulation for the external circuit connected to this product.

Contents

1. Model 8
    1.1 Model 8
    1.2 How to Read the Model Label 8
2. Names and Functions of Instrument 9
3. Mounting to the Control Panel 10
    3.1 Site Selection 10
    3.2 External Dimensions (Scale: mm) 10
    3.3 Mounting 10
4. Removal 12
5. Wiring 13
    5.1 Lead Wire Solderless Terminal 14
    5.2 Terminal Arrangement 14
    5.3 Wire the Communication Line. 15
6. Outline of Key Operation and Setting Groups 17
    6.1 Outline of Key Operation 17
    6.2 Setting Groups 17
7. Key Operation Flowchart 19
8. Setup 21
    8.1 Turn the Power Supply ON. 21
    8.2 Conductivity Input Group 22
    8.3 Temperature Input Group 31
    8.4 Basic Function Group 32
9. Calibration 40
    9.1 Conductivity Calibration Mode 40
    9.2 Temperature Calibration Mode 42
    9.3 Transmission Output 1 Adjustment Mode 43
    9.4 Transmission Output 2 Adjustment Mode 44
10. Measurement 45
    10.1 Starting Measurement 45
    10.2 A□□ Output 45
    10.3 Conductivity Input Error Alarm 46
    10.4 Error Output 46
    10.5 Fail Output 46
    10.6 Error Code during Measurement 46
    10.7 Transmission Output 1 and 2 46
11. Communication 47
    11.1 System Configuration Example 47
    11.2 Setting Method of the Conductivity Meter 48
    11.3 Communication Procedure 49
    11.4 Shinko Protocol 50
        11.4.1 Transmission Mode 50
        11.4.2 Command Configuration 50
        11.4.3 Checksum Calculation 51
    11.5 MODBUS Protocol 52
        11.5.1 Transmission Mode 52
        11.5.2 Data Communication Interval 52
        11.5.3 Message Configuration 52
        11.5.4 Message Example 54

11.6 Communication Command Table 56
11.6.1 Notes about Setting/Reading Command 56
11.6.2 Setting/Reading Command 57
11.6.3 Read Only Command 63
11.7 Conductivity & Temperature Calibrations, Transmission Output 1 & 2 Adjustments 65
via Communication Command 65
11.7.1 Conductivity Calibration 65
11.7.2 Temperature Calibration 66
11.7.3 Transmission Output 1 Adjustment 66
11.7.4 Transmission Output 2 Adjustment 67
11.8 Notes on Programming Monitoring Software 68
11.8.1 How to Speed up the Scan Time 68
11.8.2 How to Read the Set Value Changes Made by Front Keypad Operation 68
11.8.3 Note when Sending All Set Values Simultaneously 68
12. Specifications 69
12.1 Standard Specifications 69
12.2 Optional Specifications 74
13. Troubleshooting 78
13.1 Indication 78
13.2 Key Operation 79
13.3 Calibration 79
13.4 Communication 79
14. Temperature Compensation Method 81
14.1 Temperature Compensation Based on the Temperature Characteristics of NaCl 81
14.2 How to Input Temperature Coefficient 81
14.3 Temperature Compensation Based on the Temperature Characteristics of Deionized Water 83
15. Character Tables 84

1. Model

1.1 Model

WIL-10	2	-EC	L		, □□□	
Input Points	2					2 points
Input		EC				2-electrode Conductivity Sensor (Temperature element: Pt100) (*1)
						2-electrode Conductivity Sensor (Temperature element: Pt1000) (*1)
Concentration			L			Low concentration
Power Supply Voltage						100 to 240 V AC (standard)
				1		24 V AC/DC (*2)
Option					EVT	A□□ output (A11, A12, A21, A22)
					TA	Transmission output 1 (*3)
					TA2	Transmission output 1, Transmission output 2

(*1) This input temperature specification was specified at the time of ordering.

(*2) Power supply voltage 100 to 240 V AC is standard.
When ordering 24 V AC/DC, enter “1” in Power Supply Voltage after “ECL”.

(*3) If TA option is ordered, the EVT option (A1 output only) will be added.

1.2 How to Read the Model Label

The model label is attached to the left side of the case.

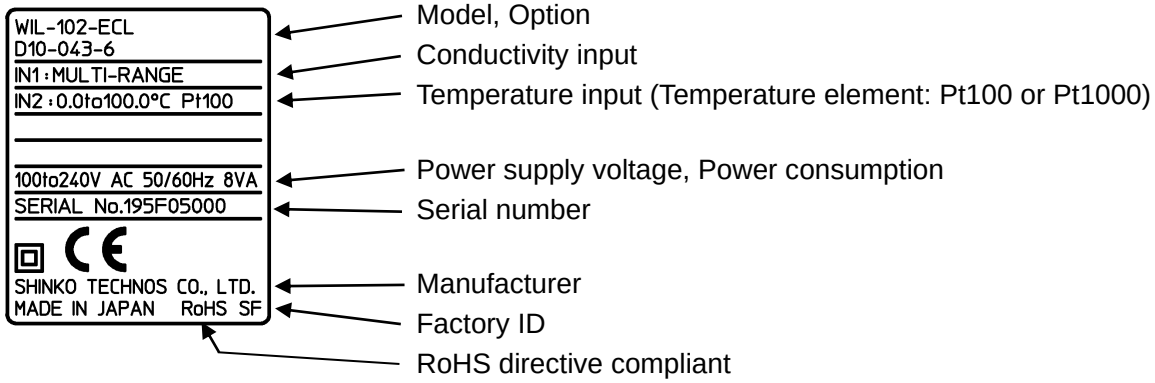

(Fig. 1.2-1)

2. Names and Functions of Instrument

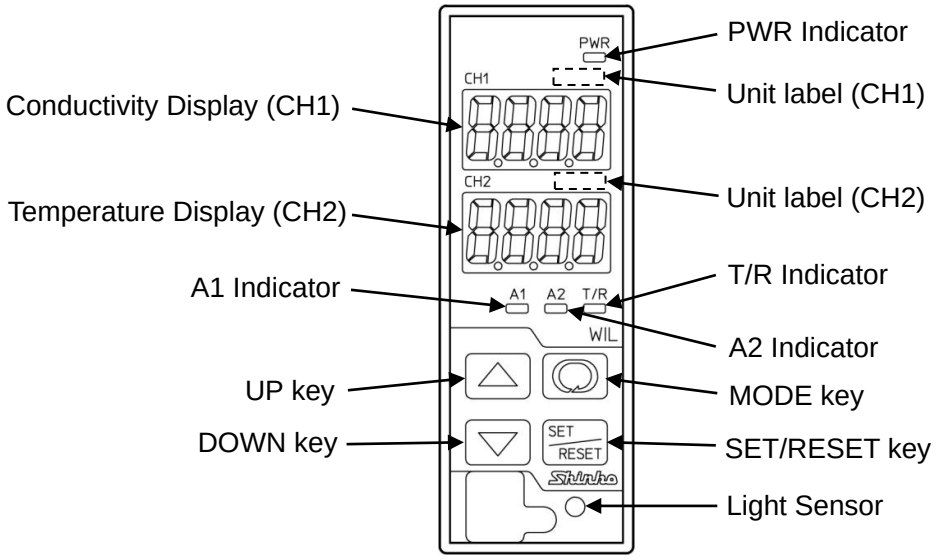

(Fig. 2-1)

Displays

Conductivity Display (CH1)	Conductivity, or characters in setting mode are indicated in red. Indications differ depending on the selections in [Display selection (p.34)].
Temperature Display (CH2)	Temperature, or values in setting mode are indicated in red. Indications differ depending on the selections in [Display selection (p.34)].

Unit label (CH1)	Attach the user's unit of Conductivity Display (CH1) from the included unit labels if necessary.
Unit label (CH2)	Attach the user's unit of Temperature Display (CH2) from the included unit labels if necessary.

Action Indicators

PWR Indicator	When power supply to the instrument is turned ON, the yellow LED lights.
A1 Indicator	When A1 output (Contact output 1) is ON, the red LED lights. (Unlit if TA2 option is ordered.)
A2 Indicator	When A2 output (Contact output 2) is ON, the yellow LED lights. (Unlit if TA option or TA2 option is ordered.)
T/R Indicator	The yellow LED lights during Serial communication TX output (transmitting).

Key

UP key	Increases the numeric value.
DOWN key	Decreases the numeric value.
MODE key	Selects a setting group.
SET/RESET key	Switches the setting modes, and registers the set value.

Light Sensor	Automatically measures and controls brightness of the Conductivity Display, Temperature Display and Action indicators.

⚠ Notice

When setting the specifications and functions of this instrument, connect mains power cable to terminals 13 and 14 first, then set them referring from "6. Outline of Key Operation and Setting Groups" to "8. Setup (pp.16 to 38)" before performing "3. Mounting to the Control Panel (p.9)" and "5. Wiring (p.12)".

3. Mounting to the Control Panel

3.1 Site Selection

> **⚠ Caution**
>
> Use within the following temperature and humidity ranges.
> Temperature: 0 to 50℃ (32 to 122℉) (No icing), Humidity: 35 to 85 %RH (Non-condensing)
> If the WIL-102-ECL is installed within a control panel, the ambient temperature of the unit – not the ambient temperature of the control panel – must be kept under 50℃. Otherwise the life of electronic parts (especially electrolytic capacitors) of the unit will be shortened.

This instrument is intended to be used under the following environmental conditions (IEC61010-1): Overvoltage category Ⅱ, Pollution degree 2

Ensure the mounting location corresponds to the following conditions:

- A minimum of dust, and an absence of corrosive gases
- No flammable, explosive gases
- No mechanical vibrations or shocks
- No exposure to direct sunlight, an ambient temperature of 0 to 50℃ (32 to 122℉) that does not change rapidly
- An ambient non-condensing humidity of 35 to 85 %RH
- No large capacity electromagnetic switches or cables through which large current is flowing
- No water, oil, chemicals or the vapors of these substances can come into direct contact with the unit.

3.2 External Dimensions (Scale: mm)

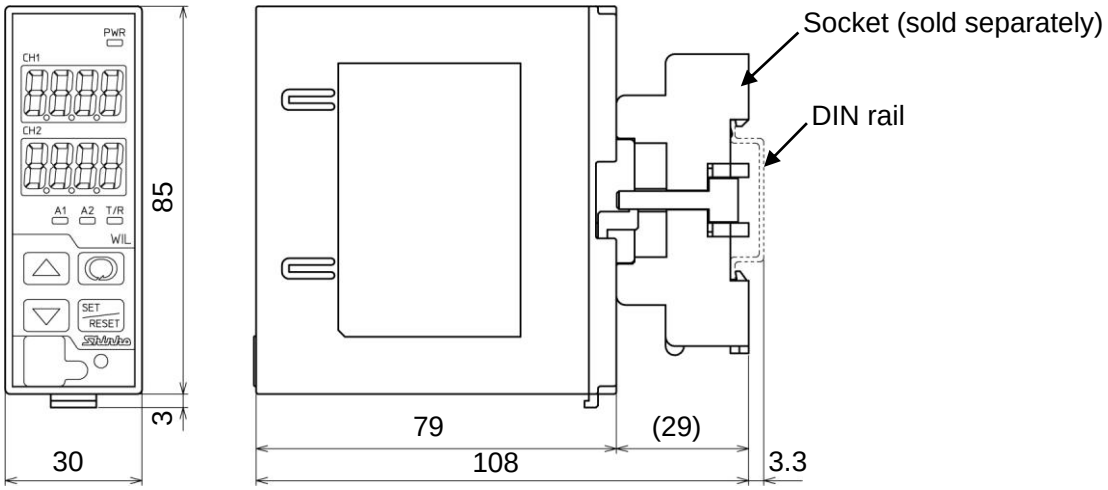

(Fig. 3.2-1)

3.3 Mounting

(1) Hook the upper part of the socket on the DIN rail, and mount it (A clicking sound is heard).

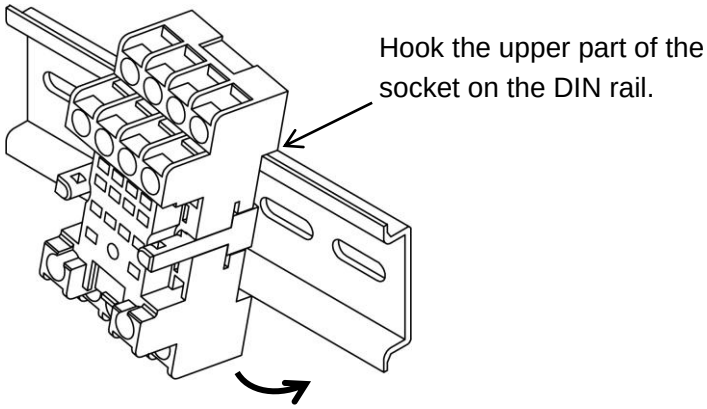

(Fig. 3.3-1)

⚠ Caution

Before inserting the WIL-102-ECL into the socket, wire the unit. Refer to Section “5. Wiring” (p.12).

(2) Check that the Lock Release has been lowered.

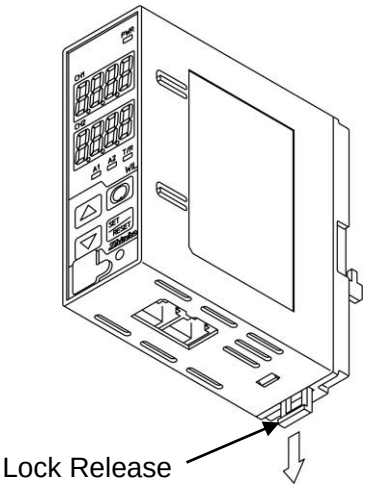

(Fig. 3.3-2)

(3) Insert the WIL-102-ECL into the socket.

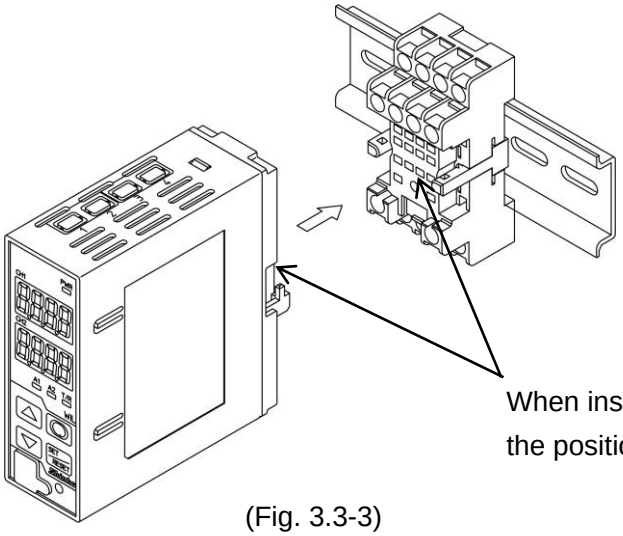

(Fig. 3.3-3)

(4) Fix the WIL-102-ECL and the socket by pushing the Lock Release up.

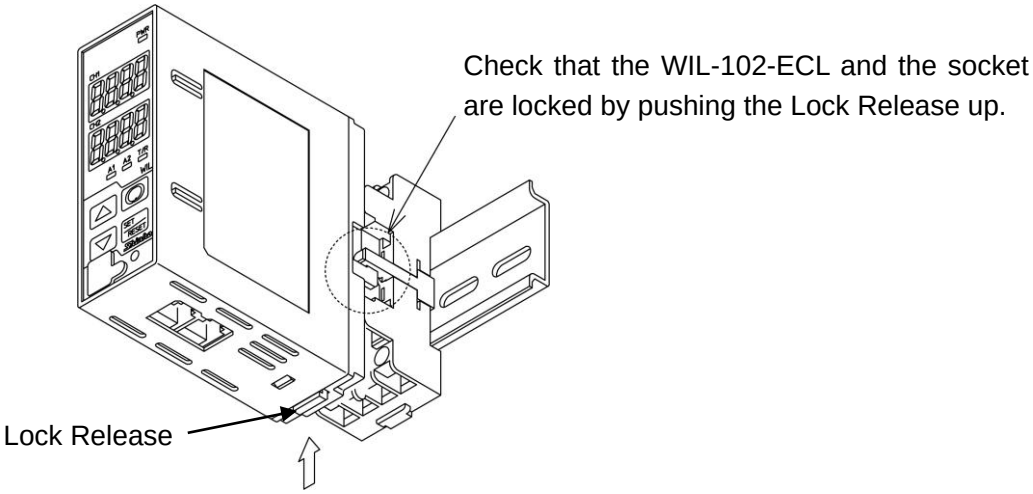

(Fig. 3.3-4)

4. Removal

(1) Turn the power supply to the unit OFF.

(2) Pull the Lock Release down, and release the WIL-102-ECL from the socket.

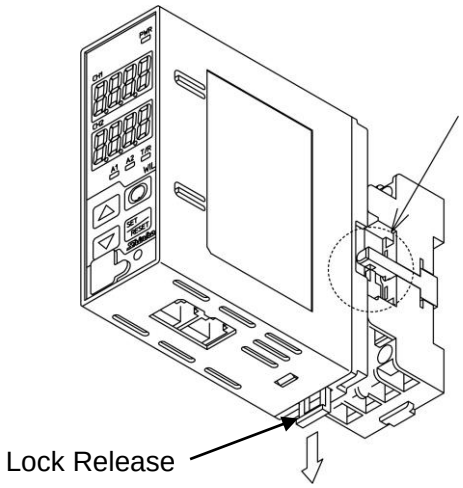

(Fig. 4-1)

(3) Separate the WIL-102-ECL from the socket.

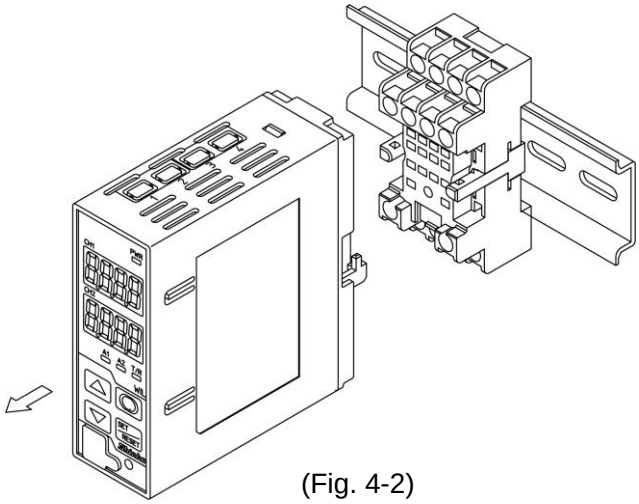

(Fig. 4-2)

(4) Remove the socket from the DIN rail by pulling the socket Lock Release (at the bottom of the socket) down.

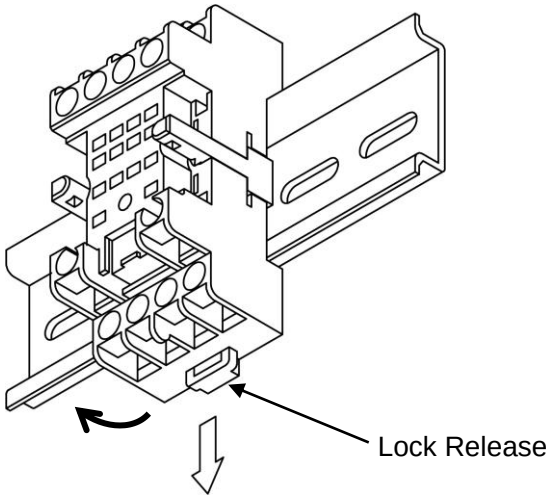

(Fig. 4-3)

5. Wiring

⚠ Warning

Turn the power supply to the instrument off before wiring or checking.
Working on or touching the terminal with the power switched on may result in severe injury or death due to electrical shock.

⚠ Caution

- Do not leave wire remnants in the instrument, as they could cause a fire or a malfunction.
- Use a solderless terminal with an insulation sleeve in which the M3 screw fits when wiring the unit.
- Tighten the terminal screw using the specified torque. If excessive force is applied to the screw when tightening, the terminal screw may be damaged.
- This instrument does not have a built-in power switch, circuit breaker and fuse.
  It is necessary to install a power switch, circuit breaker and fuse near the instrument.
  (Recommended fuse: Time-lag fuse, rated voltage 250 V AC, rated current 2 A)
- For a 24 V AC/DC power source, do not confuse polarity when using direct current (DC).
- Do not apply a commercial power source to the sensor which is connected to the input terminal nor allow the power source to come into contact with the sensor.
- Use the 2-electrode Conductivity Sensor in accordance with the sensor input specifications of this unit.
- Keep the input wires and power lines separate.

Note about the 2-Electrode Conductivity Sensor Cable

The 2-electrode Conductivity Sensor cable is a highly-insulated (electrical) cable. Please handle it with utmost care as follows.

- The 2-electrode Conductivity Sensor cable should be wired directly to the socket.
- Do not allow terminals and socket of the 2-electrode Conductivity Sensor cable to come in contact with moisture or oil of any kind. Likewise, ensure fingers are clean, otherwise the insulation will deteriorate, resulting in unstable indication.
  Be sure to keep the cable dry and clean at all times.
  If the cable is stained, clean it with alcohol, and dry it completely.
- For calibration or electrode checking/replacement, the 2-electrode Conductivity Sensor cable should be wired with sufficient length.
- Keep the 2-electrode Conductivity Sensor cable and junction cable away from electrical devices, such as motors or their power lines from which inductive interference emanates.

Connection

The 2-electrode Conductivity Sensor cable has the following terminals.

Code	Terminal
1	Conductivity sensor terminal 2
2	Conductivity sensor terminal 3
A, B (T, T)	Temperature compensation sensor terminals [Pt100 (2-wire), Pt1000] 5-6
A, B, B	Temperature compensation sensor terminals [Pt100 (3-wire)] 5-6-7
E	Shield wire terminal 8

For the electrode with No Temperature Compensation, A, B (T, T) or A, B, B cables are not available.
E cables are available depending on the sensor type.
During operation, the Conductivity/Temperature Display may become abnormal or unstable due to inductive interference or noise. In this case, try [Grounding of shield wire terminal (E) (P.77)].

5.1 Lead Wire Solderless Terminal

Use a solderless terminal with an insulation sleeve in which an M3 screw fits as follows.
The tightening torque should be 0.63 N•m.

Solderless Terminal	Manufacturer	Model
Y-type	NICHIFU TERMINAL INDUSTRIES CO., LTD.	TMEX1.25Y-3S

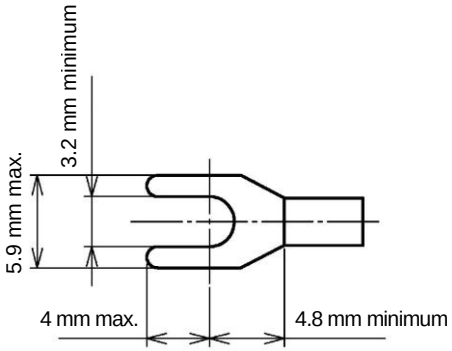

(Fig. 5.1-1)

5.2 Terminal Arrangement

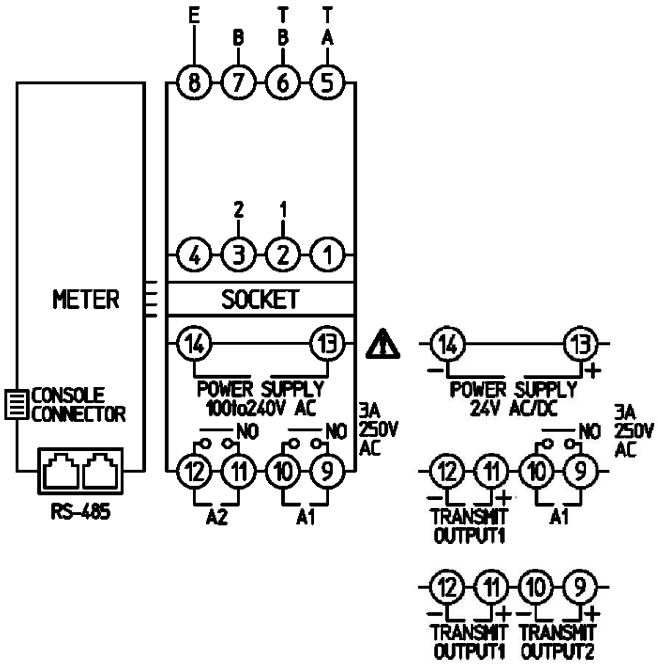

Modular Jack Pin (WIL-102-ECL side arrangement)

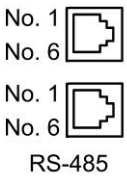

No. 1	COM
No. 2	NC
No. 3	YB(+)
No. 4	YA(−)
No. 5	NC
No. 6	COM

(Fig. 5.2-1)

1, 2: Conductivity sensor terminals 1, 2 (②-③)

A, B: (T, T) Temperature compensation sensor terminals (⑤-⑥)
Temperature element: Pt100 (2-wire type) or Pt1000

A, B, B: Temperature compensation sensor terminals (⑤-⑥-⑦)
Temperature element: Pt100 (3-wire type)

E: Shield wire terminal (⑧)

When EVT option is ordered:
A1: A1 output terminals (⑨-⑩)
A2: A2 output terminals (⑪-⑫)

When TA option is ordered:
A1: A1 output terminals (⑨-⑩)
TRANSMIT OUTPUT 1:
Transmission output 1 terminals (⑪-⑫)

When TA2 option is ordered:
TRANSMIT OUTPUT2:
Transmission output 2 terminals (⑨-⑩)
TRANSMIT OUTPUT1 :
Transmission output 1 terminals (⑪-⑫)

POWER SUPPLY:
Power terminals (⑬-⑭)
24 V AC/DC (When "1" is added after model name.)

RS-485: Serial Communication modular jack

When no option is ordered:
A1, A2, TRANSMIT OUTPUT1, TRANSMIT OUTPUT2 terminals are not equipped.

5.3 Wire the Communication Line.

Connect to the modular jack at the bottom of the instrument, using CDD (sold separately) or CPP (sold separately).

• **Wiring Example Using a USB Communication Cable CMC-001-3** (sold separately**)**

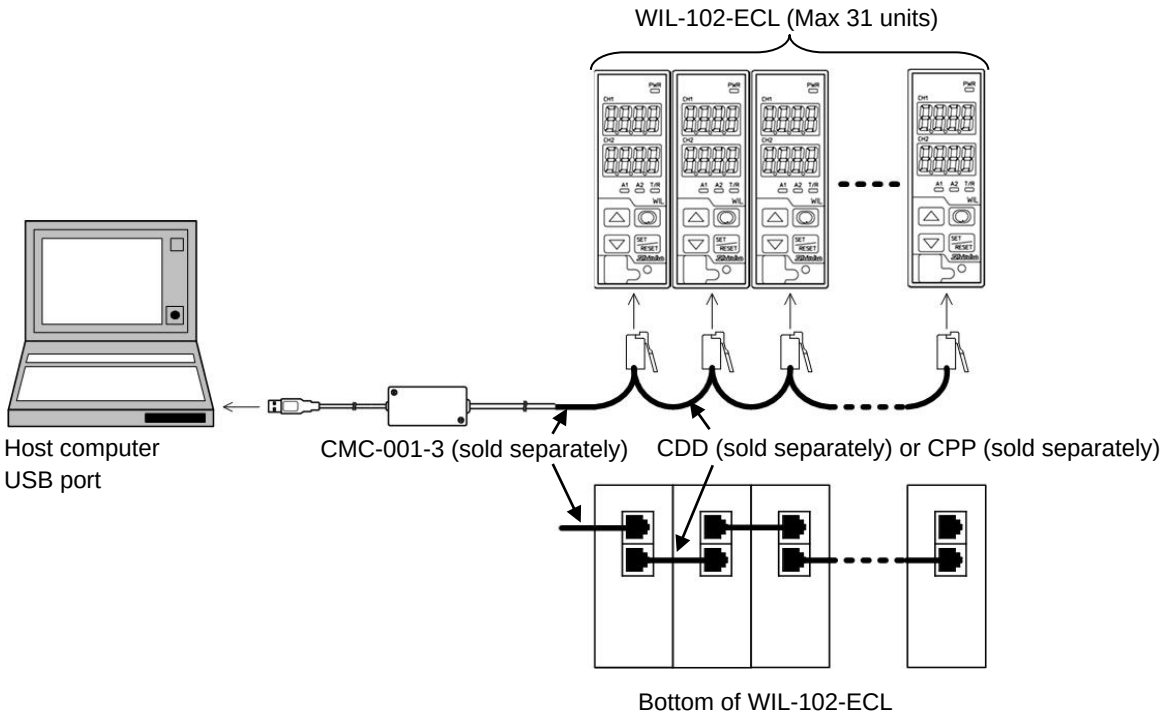

(Fig. 5.3-1)

• **Wiring Example Using a Communication Converter IF-400**

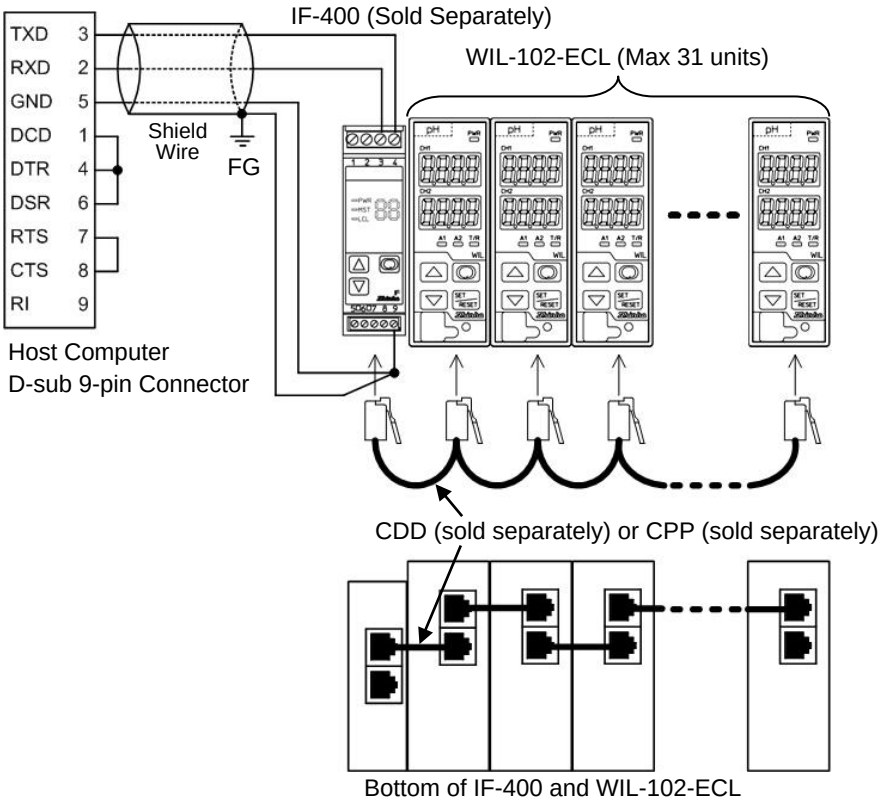

(Fig. 5.3-2)

Shield Wire

Be sure to ground only one end of the shield wire so that current cannot flow to the shield wire.
If both ends of the shield wire are grounded, the circuit will be closed, resulting in a ground loop.
This may cause noise.
Be sure to ground the FG.
Recommended cable: OTSC-VB 2PX0.5SQ (made by Onamba Co., Ltd.) or equivalent
(Use a twisted pair cable.)

Terminator (Terminal Resistor)

The terminator is mounted at the end of the wire when connecting multiple peripheral devices to a personal computer. The terminator prevents signal reflection and disturbance.
Do not connect a terminator to the communication line because each WIL-102-ECL has built-in pull-up and pull-down resistors.
Communication converter IF-400 (sold separately) has a built-in terminal resistor.

6. Outline of Key Operation and Setting Groups

6.1 Outline of Key Operation

Setting items are divided into groups, and group selection has to be made with keypads.
Press the ◎ key in Conductivity/Temperature Display Mode. The unit enters Group Selection mode.
Select a group with the ◎ key, and press the SET/RESET key. The unit enters each setting item.
To set each item, use the △ or ▽ key, and register the set value with the SET/RESET key.

6.2 Setting Groups

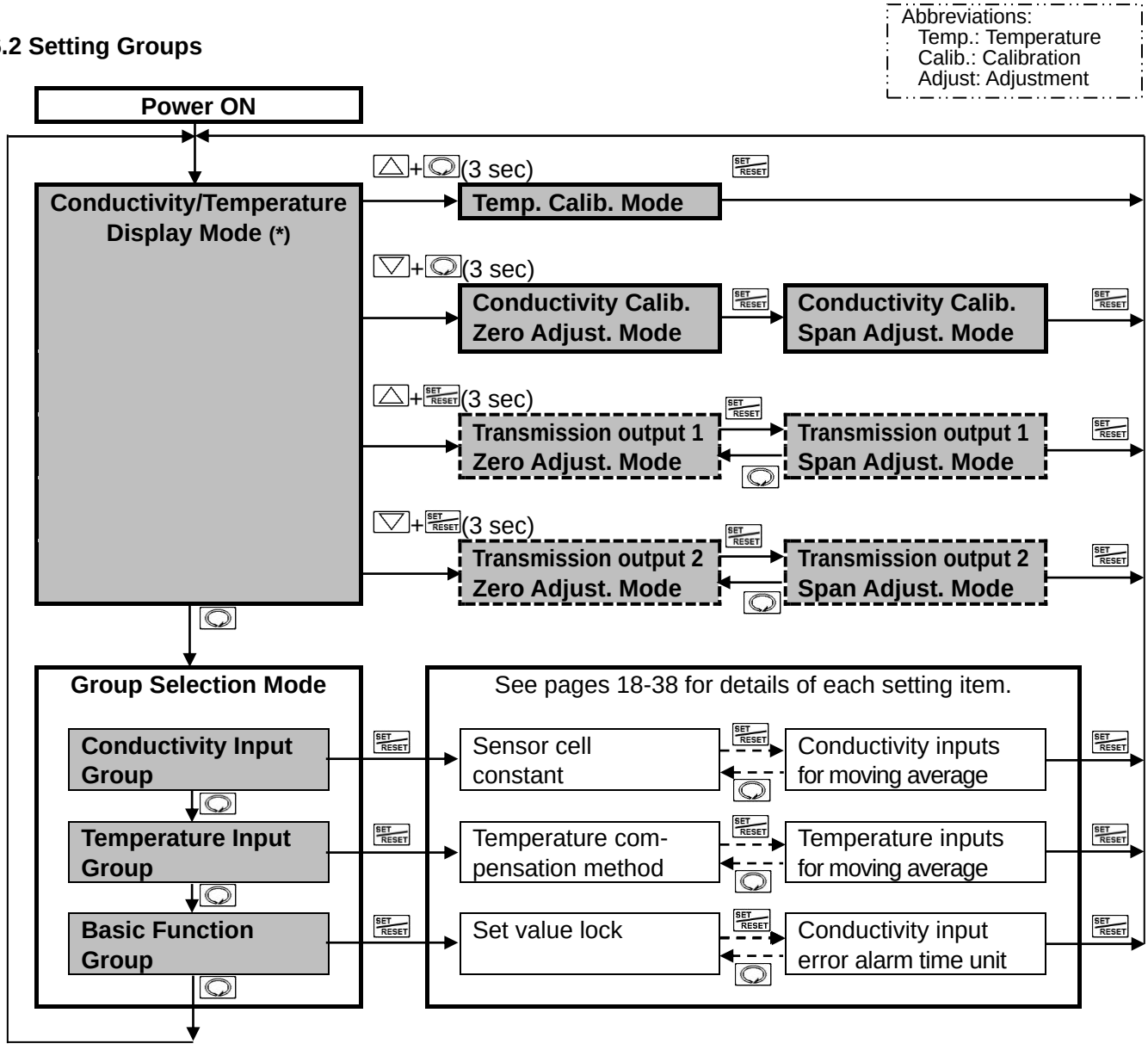

(*) Indicates the item selected in [Display selection (p.34)] in Conductivity/Temperature Display Mode.

Available when the TA option or TA2 option is ordered.

Key Operation

- △+○ (3 sec): Press and hold the △ key and ○ key (in that order) together for 3 seconds.
  The unit will proceed to Temperature Calibration Mode.
- ▽+○ (3 sec): Press and hold the ▽ key and ○ key (in that order) together for 3 seconds.
  The unit will proceed to Conductivity Calibration Zero Adjustment Mode.
- △+SET/RESET (3 sec): Press and hold the △ key and SET/RESET key (in that order) together for 3 seconds.
  The unit enters Transmission Output 1 Zero Adjustment Mode.
- ▽+SET/RESET (3 sec): Press and hold the ▽ key and SET/RESET key (in that order) together for 3 seconds.
  The unit enters Transmission Output 2 Zero Adjustment Mode.
- ○, SET/RESET: Press the ○ or SET/RESET key. The unit will enter the next setting item, illustrated by an arrow.
- SET/RESET or ○: Press the SET/RESET or ○ key until the desired setting mode appears.
- To revert to Conductivity/Temperature Display Mode, press and hold the ○ key for 3 seconds while in any mode.

7. Key Operation Flowchart

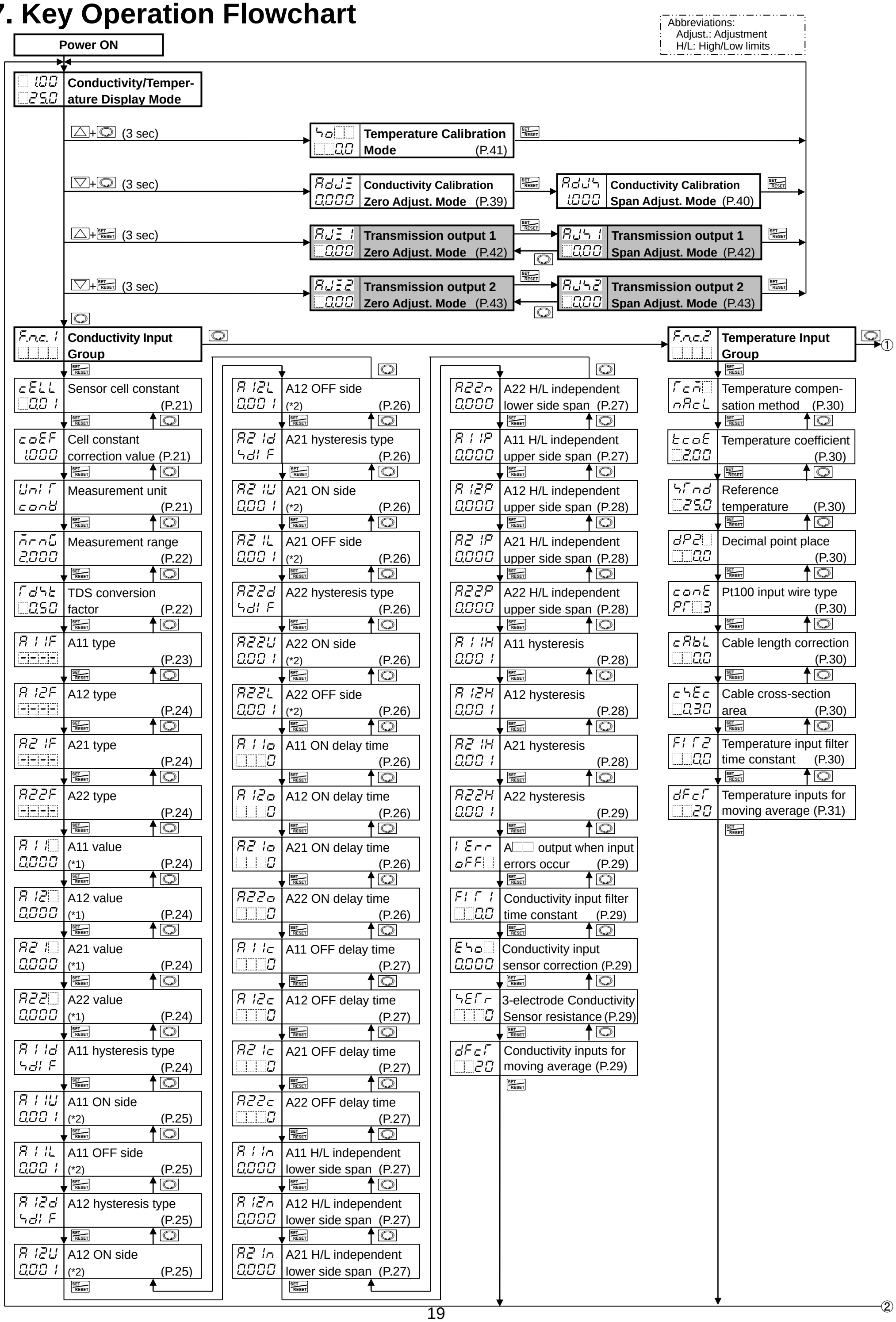

● About Setting Items

cELL 0.01	Sensor cell constant (P.21)
Fro1 Ec□□	Transmission output 1 type (P.32)

• **Upper left**: Conductivity Display: Indicates the setting item characters. • **Lower left**: Temperature Display: Indicates the factory default.
• **Right side**: Indicates the setting item and reference page.
Setting item in shaded section will be displayed only when the corresponding option is ordered.
If the TA option is added, A2 related setting items are not available.
If the TA2 option is added, A1 and A2 related setting items are not available.

(*1): Factory default value is different depending on the selection in [A□□ type]. Conductivity input: 0.00, Temperature input: 0.0℃
(*2): Factory default value is different depending on the selection in [A□□ type]. Conductivity input: 0.10, Temperature input: 1.0℃

● About Key Operation

- △+◎(3 sec): Press and hold the △, ◎ keys (in that order) for 3 sec. The unit enters Temperature calibration mode.
- ▽+◎(3 sec): Press and hold the ▽, ◎ keys (in that order) for 3 sec. The unit enters Conductivity calibration zero adjustment mode.
- △+SET/RESET(3 sec): Press and hold the △, SET/RESET keys (in that order) for 3 sec. The unit enters Transmission output 1 zero adjustment mode.
- ▽+SET/RESET(3 sec): Press and hold the ▽, SET/RESET keys (in that order) for 3 sec. The unit enters Transmission output 2 zero adjustment mode.
- ◎ or SET/RESET: Press the ◎ or SET/RESET key. The unit enters the next setting item.
- To revert to Conductivity/Temperature Display Mode, press and hold the ◎ key for 3 sec while in any mode.

Abbreviation:
Trans: Transmission

① → ◎

- **Basic Function Group** (orEr)
- SET/RESET
- Lock — Set value lock (P.31)
- SET/RESET / ◎
- cAnL noAL — Communication protocol (P.31)
- SET/RESET / ◎
- cAno 0 — Instrument number (P.31)
- SET/RESET / ◎
- cAnP 96 — Communication speed (P.31)
- SET/RESET / ◎
- cAnF 7EVn — Data bit/Parity (P.31)
- SET/RESET / ◎
- cAnT 1 — Stop bit (P.32)
- SET/RESET / ◎
- Fro1 Ec□□ — Transmmision output 1 type (P.32)
- SET/RESET / ◎
- FrH1 2.000 — Transmmision output 1 high limit (P.32)
- SET/RESET / ◎
- FrL1 0.000 — Transmmision output 1 low limit (P.32)
- SET/RESET / ◎
- Fro2 rEAP — Transmmision output 2 type (P.32)
- SET/RESET / ◎
- FrH2 100.0 — Transmmision output 2 high limit (P.33)
- SET/RESET / ◎
- FrL2 0.0 — Transmmision output 2 low limit (P.33)
- SET/RESET / ◎
- Frc1 bEFH — Trans. output 1 status when calibrating (P.33)
- SET/RESET / ◎
- Frh1 0.000 — Trans. output 1 value HOLD when calibrating
- SET/RESET / ◎ (p.33)
- Frc2 bEFH — Trans. output 2 status when calibrating (P.33)
- SET/RESET / ◎
- Frh2 0.0 — Trans. output 2 value HOLD when calibrating
- SET/RESET / ◎ (p.34)
- LIGT — Auto-light function (P.34)
- SET/RESET / ◎
- diSP ALL□ — Display selection (P.34)
- SET/RESET

◎

- FiAE 0000 — Indication time (P.34)
- SET/RESET / ◎
- oFdP oFF□ — Temperature Display when no temperature compensation (P.34)
- SET/RESET / ◎
- A1oF A11 — A1 output allocation (P.35)
- SET/RESET / ◎
- A2oF A21 — A2 output allocation (P.35)
- SET/RESET / ◎
- oon1 0 — Output ON time when A1 output ON (P.35)
- SET/RESET / ◎
- ooF1 0 — Output OFF time when A1 output ON (P.36)
- SET/RESET / ◎
- oon2 0 — Output ON time when A2 output ON (P.36)
- SET/RESET / ◎
- ooF2 0 — Output OFF time when A2 output ON (P.36)
- SET/RESET / ◎
- A1E□ ---- — A1 conductivity input error alarm A□□ type (P.36)
- SET/RESET / ◎
- A2E□ ---- — A2 conductivity input error alarm A□□ type (P.36)
- SET/RESET / ◎
- A1Eo 0.000 — A1 conductivity input error alarm band when A□□ output ON (P.37)
- SET/RESET / ◎
- A1oT 0 — A1 conductivity input error alarm time when A□□ output ON (P.37)
- SET/RESET / ◎
- A1Ec 0.000 — A1 conductivity input error alarm band when A□□ output OFF (P.37)
- SET/RESET / ◎
- A1cT 0 — A1 conductivity input error alarm time when A□□ output OFF (P.37)
- SET/RESET / ◎
- A2Eo 0.000 — A2 conductivity input error alarm band when A□□ output ON (P.37)
- SET/RESET / ◎
- A2oT 0 — A2 conductivity input error alarm time when A□□ output ON (P.38)
- SET/RESET / ◎
- A2Ec 0.000 — A2 conductivity input error alarm band when A□□ output OFF (P.38)
- SET/RESET / ◎
- A2cT 0 — A2 conductivity input error alarm time when A□□ output OFF (P.38)
- SET/RESET

◎

- n_tU tEc□ — Conductivity input error alarm time unit (P.38)
- SET/RESET

② → ◎

8. Setup

Before using this instrument, setup should be performed to suit the conditions of usage:
Setting the Cell constant correction value, Measurement unit, A11, A12, A21 and A22 types, Temperature compensation method, Communication, A□□ output when input errors occur, etc.

Setup can be conducted in the Conductivity Input Group, Temperature Input Group and Basic Function Group.

If the user's specification is the same as the factory default value of the WIL-102-ECL, or if setup has already been completed, it is not necessary to set up the instrument. Proceed to Section "9. Calibration (p.39)".

8.1 Turn the Power Supply ON.

For approximately 4 seconds after the power is switched ON, the input characters are indicated on the Conductivity Display and Temperature Display. See (Table. 8.1-1).

(Table. 8.1-1)

Display	Character	Measurement Unit	
Conductivity Display	conD	Conductivity (μS/cm)	
	SI □□	Conductivity (mS/m)	
	rdS□	TDS conversion (mg/L)	
Display	**Character**	**Input Temperature Specification** (*)	**Selection Item in [Pt100 Input Wire Type] (p.30)**
Temperature Display	Pr□2	Pt100	Pr□2 : 2-wire type
	Pr□3		Pr□3 : 3-wire type
	Pr 10	Pt1000	

(*) This input temperature specification was specified when ordering.

During this time, all outputs are in OFF status, and LED indicators except the PWR Indicator turn off. After that, measurement starts, indicating the item selected in [Display selection (p.34)].
This status is called Conductivity/Temperature Display Mode.

8.2 Conductivity Input Group

To enter the Conductivity Input Group, follow the procedure below.

① F.nc.1 Press the ◯ key in Conductivity/Temperature Display Mode.

② cELL Press the SET/RESET key.

The unit enters the Conductivity Input Group, and “Sensor cell constant” is indicated.

Character	Setting Item, Function, Setting Range	Factory Default
cELL □0.01	**Sensor cell constant** • Selects sensor cell constant. **If the Sensor cell constant is changed, Conductivity Zero and Span adjustment values and Cell constant correction value will be cleared.** **Set the Cell constant correction value again, and re-calibrate the Conductivity Zero and Span adjustment values.** • If the 3-electrode Conductivity Sensor is used, select 1.0/cm. Measurement can be made within the measurement range of cell constant 1.0/cm. Refer to (Table 8.2-3). (p.22) • Selection item: □0.01 : 0.01/cm □□0.1 : 0.1/cm □□ 1.0 : 1.0/cm	0.01/cm
coEF 1.000	**Cell constant correction value** • Sets sensor cell constant correction value. coEF and conductivity are displayed alternately. • Setting range: 0.001 to 5.000	1.000
Unit conD	**Measurement unit** • Selects the conductivity unit. **If the conductivity unit is changed, Conductivity Zero and Span adjustment values will be cleared. Re-calibrate the Conductivity Zero and Span adjustment values.** • Selection item: conD : Conductivity (μS/cm) mS□□ : Conductivity (mS/m) TDS□ : TDS conversion (mg/L)	Conductivity (μS/cm)

Character	Setting Item, Function, Setting Range	Factory Default
rnG 2.000	**Measurement range** • Selects the measurement range of conductivity. **If measurement range is changed, Conductivity Zero and Span adjustment values will be cleared.** **Re-calibrate the Conductivity Zero and Span adjustment values.** • Selection item differs depending on the sensor cell constant and measurement unit.	2.000 μS/cm

When sensor cell constant 0.01/cm is selected:

(Table 8.2-1)

Measurement Unit	Selection Item	Measurement Range
Conductivity (μS/cm)	2.000	0.000 to 2.000 μS/cm
	20.00	0.00 to 20.00 μS/cm
	50.00	0.00 to 50.00 μS/cm
Conductivity (mS/m)	0.200	0.000 to 0.200 mS/m
	2.000	0.000 to 2.000 mS/m
	5.000	0.000 to 5.000 mS/m
TDS conversion (mg/L)	2.00	0.00 to 2.00 mg/L
	20.0	0.0 to 20.0 mg/L
	50.0	0.0 to 50.0 mg/L

When sensor cell constant 0.1/cm is selected:

(Table 8.2-2)

Measurement Unit	Selection Item	Measurement Range
Conductivity (μS/cm)	20.00	0.00 to 20.00 μS/cm
	50.00	0.00 to 50.00 μS/cm
	500.0	0.0 to 500.0 μS/cm
Conductivity (mS/m)	2.000	0.000 to 2.000 mS/m
	5.000	0.000 to 5.000 mS/m
	50.00	0.000 to 50.00 mS/m
TDS conversion (mg/L)	20.0	0.0 to 20.0 mg/L
	200	0 to 200 mg/L
	500	0 to 500 mg/L

When sensor cell constant 1.0/cm is selected:

(Table 8.2-3)

Measurement Unit	Selection Item	Measurement Range
Conductivity (μS/cm)	200.0	0.0 to 200.0 μS/cm
Conductivity (mS/m)	20.00	0.00 to 20.00 mS/m
TDS conversion (mg/L)	200	0 to 200 mg/L

Fdkt 0.50	**TDS conversion factor** • Sets TDS conversion factor. Available only when Fdk [TDS conversion (mg/L)] is selected in [Measurement unit]. • Setting range: 0.30 to 1.00	0.50

Character	Setting Item, Function, Setting Range	Factory Default
A11F ----	**A11 type**	No action

• Selects an A11 type.

Note: If A11 type is changed, the A11 value defaults to 0.00 or 0.0.

• ---- : No action
EC_L : Conductivity input low limit action (Fig. 8.2-1)
EC_H : Conductivity input high limit action (Fig. 8.2-1)
TMPL : Temperature input low limit action (Fig. 8.2-1)
TMPH : Temperature input high limit action (Fig. 8.2-1)
ERor : Error output [Output turns ON when the error type is "Error". (Table 8.2-4)]
FAIL : Fail output [Output turns ON when the error type is "Fail". (Table 8.2-4)]
ECHL : Conductivity input High/Low limits independent action (Fig. 8.2-2)
TMHL : Temperature input High/Low limits independent action (Fig. 8.2-2)

• **A11 action (Activated based on the indication value.)**

Conductivity input low limit action, Temperature input low limit action	**Conductivity input high limit action, Temperature input high limit action**
If Medium Value is selected in [A11 hysteresis type]: 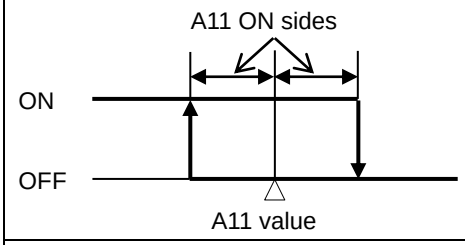 	If Medium Value is selected in [A11 hysteresis type]: 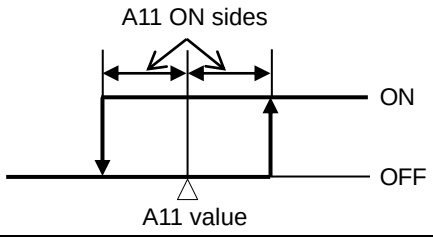
If Reference Value is selected in [A11 hysteresis type]: 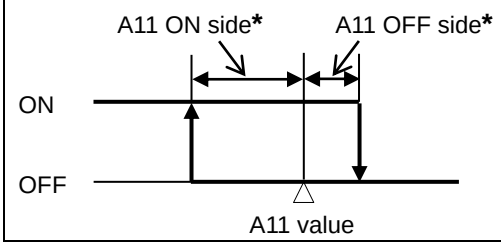 	If Reference Value is selected in [A11 hysteresis type]: 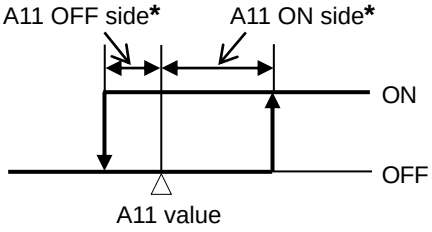

(Fig. 8.2-1)

*** Setting Example:**

If [A11 ON side (A11U)] is set to 0.00 or 0.0, A11 output can be turned ON at the value set in [A11 value (A11□)].
If [A11 OFF side (A11L)] is set to 0.00 or 0.0, A11 output can be turned OFF at the value set in [A11 value (A11□)].

Conductivity input High/Low limits independent action, Temperature input High/Low limits independent action
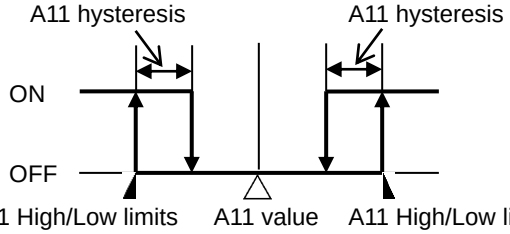

(Fig. 8.2-2)

<table>
<tr><th>Character</th><th>Setting Item, Function, Setting Range</th><th>Factory Default</th></tr>
<tr><td></td><td colspan="2">• Error output, Fail output
(Table. 8.2-4)
<table>
<tr><th>Error Type</th><th>Error</th><th>Description</th></tr>
<tr><td>Fail</td><td>Temperature sensor burnout.</td><td>Temperature sensor lead wire is burnt out.</td></tr>
<tr><td>Fail</td><td>Temperature sensor short-circuited</td><td>Temperature sensor lead wire is short-circuited.</td></tr>
<tr><td>Error</td><td>Outside temperature compensation range</td><td>Measured temperature has exceeded 110.0℃.</td></tr>
<tr><td>Error</td><td>Outside temperature compensation range</td><td>Measured temperature is less than 0.0℃.</td></tr>
</table></td></tr>
<tr><td>A12F
----</td><td>A12 type
• Selects an A12 type.
Note: If A12 type is changed, the A12 value defaults to 0.00 or 0.0.
• For the selection item and action, refer to A11 type. (p.23)</td><td>No action</td></tr>
<tr><td>A21F
----</td><td>A21 type
• Selects an A21 type.
Note: If A21 type is changed, the A21 value defaults to 0.00 or 0.0.
• For the selection item and action, refer to A11 type. (p.23)</td><td>No action</td></tr>
<tr><td>A22F
----</td><td>A22 type
• Selects an A22 type.
Note: If A22 type is changed, the A22 value defaults to 0.00 or 0.0.
• For the selection item and action, refer to A11 type. (p.23)</td><td>No action</td></tr>
<tr><td>A11
0.000</td><td>A11 value
• Sets an A11 value.
• Not available if ---- (No action), Error (Error output) or FAIL (Fail output) is selected in [A11 type].
• Setting range:
Conductivity input: Measurement range low limit to Measurement range high limit (*1)
Temperature input: 0.0 to 100.0℃ (*2)</td><td>Conductivity input: 0.000 μS/cm, Temp. input: 0.0℃</td></tr>
<tr><td>A12
0.000</td><td>A12 value
• Sets an A12 value.
• Indication condition and setting range are the same as those of A11 value. (p.24)</td><td>Conductivity input: 0.000 μS/cm, Temp. input: 0.0℃</td></tr>
<tr><td>A21
0.000</td><td>A21 value
• Sets an A21 value.
• Indication condition and setting range are the same as those of A11 value. (p.24)</td><td>Conductivity input: 0.000 μS/cm, Temp. input: 0.0℃</td></tr>
<tr><td>A22
0.000</td><td>A22 value
• Sets an A22 value.
• Indication condition and setting range are the same as those of A11 value. (p.24)</td><td>Conductivity input: 0.000 μS/cm, Temp. input: 0.0℃</td></tr>
<tr><td>A11d
hdiF</td><td>A11 hysteresis type
• Selects A11 hysteresis type (Medium or Reference Value).
• Not available if ---- (No action), Error (Error output) or FAIL (Fail output) is selected in [A11 type].
• Selection item:
cdiF: Medium Value
Sets the same value for both ON and OFF sides in relation to A11 value.
Only ON side needs to be set.
hdiF: Reference Value
Sets individual values for ON and OFF sides in relation to A11 value.
Both ON and OFF sides need to be set individually.</td><td>Reference Value</td></tr>
</table>

(*1) The measurement unit and decimal point place follow the measurement range.

(*2) The placement of the decimal point does not follow the selection. It is fixed.

<table>
<tr><th>Character</th><th>Setting Item, Function, Setting Range</th><th>Factory Default</th></tr>
<tr><td>A1U
0.001</td><td>A11 ON side
• Sets the span of A11 ON side.
If cdiF (Medium Value) is selected in [A11 hysteresis type], the span of ON/OFF side will be the same value.
• Not available if ----- (No action), Error (Error output) or FAIL (Fail output) is selected in [A11 type].
(Table 8.2-5)
<table>
<tr><th>A□□ Type</th><th colspan="2">Measurement Range</th><th>Setting Range</th></tr>
<tr><td rowspan="20">Conductivity input low limit action
Conductivity input high limit action</td><td rowspan="9">Cell constant 0.01/cm</td><td>0.000 to 2.000 μS/cm</td><td>0.000 to 0.200 μS/cm</td></tr>
<tr><td>0.00 to 20.00 μS/cm</td><td>0.00 to 2.00 μS/cm</td></tr>
<tr><td>0.00 to 50.00 μS/cm</td><td>0.00 to 5.00 μS/cm</td></tr>
<tr><td>0.000 to 0.200 mS/m</td><td>0.000 to 0.020 mS/m</td></tr>
<tr><td>0.000 to 2.000 mS/m</td><td>0.000 to 0.200 mS/m</td></tr>
<tr><td>0.000 to 5.000 mS/m</td><td>0.000 to 0.500 mS/m</td></tr>
<tr><td>0.00 to 2.00 mg/L</td><td>0.00 to 0.20 mg/L</td></tr>
<tr><td>0.0 to 20.0 mg/L</td><td>0.0 to 2.0 mg/L</td></tr>
<tr><td>0.0 to 50.0 mg/L</td><td>0.0 to 5.0 mg/L</td></tr>
<tr><td rowspan="9">Cell constant 0.1/cm</td><td>0.00 to 20.00 μS/cm</td><td>0.00 to 2.00 μS/cm</td></tr>
<tr><td>0.00 to 50.00 μS/cm</td><td>0.00 to 5.00 μS/cm</td></tr>
<tr><td>0.0 to 500.0 μS/cm</td><td>0.0 to 50.0 μS/cm</td></tr>
<tr><td>0.000 to 2.000 mS/m</td><td>0.000 to 0.200 mS/m</td></tr>
<tr><td>0.000 to 5.000 mS/m</td><td>0.000 to 0.500 mS/m</td></tr>
<tr><td>0.00 to 50.00 mS/m</td><td>0.00 to 5.00 mS/m</td></tr>
<tr><td>0.0 to 20.0 mg/L</td><td>0.0 to 2.0 mg/L</td></tr>
<tr><td>0 to 200 mg/L</td><td>0 to 20 mg/L</td></tr>
<tr><td>0 to 500 mg/L</td><td>0 to 50 mg/L</td></tr>
<tr><td rowspan="3">Cell constant 1.0/cm</td><td>0.0 to 200.0 μS/cm</td><td>0.0 to 20.0 μS/cm</td></tr>
<tr><td>0.00 to 20.00 mS/m</td><td>0.00 to 2.00 mS/m</td></tr>
<tr><td>0 to 200 mg/L</td><td>0 to 20 mg/L</td></tr>
<tr><td>Temperature input low limit action
Temperature input high limit action</td><td colspan="2">0.0 to 100.0℃</td><td>0.0 to 10.0℃</td></tr>
</table></td><td>Conductivity input: 0.001 μS/cm
Temperature input: 1.0℃</td></tr>
<tr><td>A1L
0.001</td><td>A11 OFF side
• Sets the span of A11 OFF side.
• Not available if cdiF (Medium Value) is selected in [A11 hysteresis type].
• Not available if ----- (No action), Error (Error output) or FAIL (Fail output) is selected in [A11 type].
• Setting range differs depending on the selections of A11 type and measurement range. See (Table 8.2-5). (p.25)</td><td>Conductivity input: 0.001 μS/cm
Temperature input: 1.0℃</td></tr>
<tr><td>A12d
hdiF</td><td>A12 hysteresis type
• Selects A12 hysteresis type (Medium or Reference Value).
• Indication condition and selection item are the same as those of A11 hysteresis type. (p.24)</td><td>Reference Value</td></tr>
<tr><td>A12U
0.001</td><td>A12 ON side
• Sets the span of A12 ON side.
If cdiF (Medium Value) is selected in [A12 hysteresis type], the span of ON/OFF side will be the same value.
• Indication condition and setting range are the same as those of A11 ON side. (p.25)</td><td>Conductivity input: 0.001 μS/cm
Temperature input: 1.0℃</td></tr>
</table>

Character	Setting Item, Function, Setting Range	Factory Default
A12L 0.001	**A12 OFF side** • Sets the span of A12 OFF side. • Indication condition and setting range are the same as those of A11 OFF side. (p.25)	Conductivity input: 0.001 μS/cm Temperature input: 1.0℃
A2Id HdiF	**A21 hysteresis type** • Selects A21 hysteresis type (Medium or Reference Value). • Indication condition and selection item are the same as those of A11 hysteresis type. (p.24)	Reference Value
A2IU 0.001	**A21 ON side** • Sets the span of A21 ON side. If cdiF (Medium Value) is selected in [A21 hysteresis type], the span of ON/OFF side will be the same value. • Indication condition and setting range are the same as those of A11 ON side. (p.25)	Conductivity input: 0.001 μS/cm Temperature input: 1.0℃
A2IL 0.001	**A21 OFF side** • Sets the span of A21 OFF side. • Indication condition and setting range are the same as those of A11 OFF side. (p.25)	Conductivity input: 0.001 μS/cm Temperature input: 1.0℃
A22d HdiF	**A22 hysteresis type** • Selects A22 hysteresis type (Medium or Reference Value). • Indication condition and selection item are the same as those of A11 hysteresis type. (p.24)	Reference Value
A22U 0.001	**A22 ON side** • Sets the span of A22 ON side. If cdiF (Medium Value) is selected in [A22 hysteresis type], the span of ON/OFF side will be the same value. • Indication condition and setting range are the same as those of A11 ON side. (p.25)	Conductivity input: 0.001 μS/cm Temperature input: 1.0℃
A22L 0.001	**A22 OFF side** • Sets the span of A22 OFF side. • Indication condition and setting range are the same as those of A11 OFF side. (p.25)	Conductivity input: 0.001 μS/cm Temperature input: 1.0℃
A1do □□□0	**A11 ON delay time** • Sets A11 ON delay time. The A11 does not turn ON (under the conditions of turning ON) until the time set in [A11 ON delay time] elapses. • Not available if ---- (No action), Error (Error output) or FAIL (Fail output) is selected in [A11 type]. • Setting range: 0 to 9999 seconds	0 seconds
A12o □□□0	**A12 ON delay time** • Sets A12 ON delay time. The A12 does not turn ON (under the conditions of turning ON) until the time set in [A12 ON delay time] elapses. • Indication condition and setting range are the same as those of A11 ON delay time. (p.26)	0 seconds
A2 1o □□□0	**A21 ON delay time** • Sets A21 ON delay time. The A21 does not turn ON (under the conditions of turning ON) until the time set in [A21 ON delay time] elapses. • Indication condition and setting range are the same as those of A11 ON delay time. (p.26)	0 seconds
A22o □□□0	**A22 ON delay time** • Sets A22 ON delay time. The A22 does not turn ON (under the conditions of turning ON) until the time set in [A22 ON delay time] elapses. • Indication condition and setting range are the same as those of A11 ON delay time. (p.26)	0 seconds

Character	Setting Item, Function, Setting Range	Factory Default
A1Ic □□□0	**A11 OFF delay time** • Sets A11 OFF delay time. The A11 does not turn OFF (under the conditions of turning OFF) until the time set in [A11 OFF delay time] elapses. • Not available if -----(No action), Error (Error output) or FAIL (Fail output) is selected in [A11 type]. • Setting range: 0 to 9999 seconds	0 seconds
A12c □□□0	**A12 OFF delay time** • Sets A12 OFF delay time. The A12 does not turn OFF (under the conditions of turning OFF) until the time set in [A12 OFF delay time] elapses. • Indication condition and setting range are the same as those of A11 OFF delay time.(p.27)	0 seconds
A2Ic □□□0	**A21 OFF delay time** • Sets A21 OFF delay time. The A21 does not turn OFF (under the conditions of turning OFF) until the time set in [A21 OFF delay time] elapses. • Indication condition and setting range are the same as those of A11 OFF delay time.(p.27)	0 seconds
A22c □□□0	**A22 OFF delay time** • Sets A22 OFF delay time. The A22 does not turn OFF (under the conditions of turning OFF) until the time set in [A22 OFF delay time] elapses. • Indication condition and setting range are the same as those of A11 OFF delay time.(p.27)	0 seconds
A1In 0.000	**A11 High/Low limits independent lower side span** • Sets the lower side span of A11 High/Low limits independent action. Disabled when set to 0.000 or 0.0℃. • Available when EcHL (Conductivity input High/Low limits independent action) or THHL (Temperature input High/Low limits independent action) is selected in [A11 type]. • Setting range: Conductivity input: Measurement range low limit to Measurement range high limit (*1) Temperature input: 0.0 to 100.0℃ (*2)	Conductivity input: 0.000 μS/cm Temperature input: 0.0℃
A12n 0.000	**A12 High/Low limits independent lower side span** • Sets the lower side span of A12 High/Low limits independent action. • For the action, indication condition and setting range, refer to [A11 High/Low limits independent lower side span]. (p.27)	Conductivity input: 0.000 μS/cm Temperature input: 0.0℃
A2In 0.000	**A21 High/Low limits independent lower side span** • Sets the lower side span of A21 High/Low limits independent action. • For the action, indication condition and setting range, refer to [A11 High/Low limits independent lower side span]. (p.27)	Conductivity input: 0.000 μS/cm Temperature input: 0.0℃
A22n 0.000	**A22 High/Low limits independent lower side span** • Sets the lower side span of A22 High/Low limits independent action. • For the action, indication condition and setting range, refer to [A11 High/Low limits independent lower side span]. (p.27)	Conductivity input: 0.000 μS/cm Temperature input: 0.0℃
A1IP 0.000	**A11 High/Low limits independent upper side span** • Sets the upper side span of A11 High/Low limits independent action. Disabled when set to 0.000 or 0.0℃. • Available when EcHL (Conductivity input High/Low limits independent action) or THHL (Temperature input High/Low limits independent action) is selected in [A11 type]. • Setting range: Conductivity input: Measurement range low limit to Measurement range high limit (*1) Temperature input: 0.0 to 100.0℃ (*2)	Conductivity input: 0.000 μS/cm Temperature input: 0.0℃

(*1) The measurement unit and decimal point place follow the measurement range.

(*2) The placement of the decimal point does not follow the selection. It is fixed.

<table>
<tr><th>Character</th><th>Setting Item, Function, Setting Range</th><th>Factory Default</th></tr>
<tr><td>A12P
0.000</td><td colspan="2">A12 High/Low limits independent upper side span
• Sets the upper side span of A12 High/Low limits independent action.
• For the action, indication condition and setting range, refer to [A11 High/Low limits independent upper side value]. (p.27)</td><td>Conductivity input: 0.000 μS/cm
Temperature input: 0.0℃</td></tr>
<tr><td>A21P
0.000</td><td colspan="2">A21 High/Low limits independent upper side span
• Sets the upper side span of A21 High/Low limits independent action.
• For the action, indication condition and setting range, refer to [A11 High/Low limits independent upper side value]. (p.27)</td><td>Conductivity input: 0.000 μS/cm
Temperature input: 0.0℃</td></tr>
<tr><td>A22P
0.000</td><td colspan="2">A22 High/Low limits independent upper side span
• Sets the upper side span of A22 High/Low limits independent action.
• For the action, indication condition and setting range, refer to [A11 High/Low limits independent upper side value]. (p.27)</td><td>Conductivity input: 0.000 μS/cm
Temperature input: 0.0℃</td></tr>
<tr><td>A11H
0.001</td><td colspan="2">A11 hysteresis
• Sets hysteresis of A11 High/Low limits independent action.
• Available when EcHL (Conductivity input High/Low limits independent action) or THL (Temperature input High/Low limits independent action) is selected in [A11 type].
• Setting range differs depending on the selections of A11 type and measurement range.
(Table 8.2-6)
<table>
<tr><th>A□□ Type</th><th colspan="2">Measurement Range</th><th>Setting Range</th></tr>
<tr><td rowspan="20">Conductivity input low limit action

Conductivity input high limit action</td><td rowspan="9">Cell constant 0.01/cm</td><td>0.000 to 2.000 μS/cm</td><td>0.001 to 0.200 μS/cm</td></tr>
<tr><td>0.00 to 20.00 μS/cm</td><td>0.01 to 2.00 μS/cm</td></tr>
<tr><td>0.00 to 50.00 μS/cm</td><td>0.01 to 5.00 μS/cm</td></tr>
<tr><td>0.000 to 0.200 mS/m</td><td>0.001 to 0.020 mS/m</td></tr>
<tr><td>0.000 to 2.000 mS/m</td><td>0.001 to 0.200 mS/m</td></tr>
<tr><td>0.000 to 5.000 mS/m</td><td>0.001 to 0.500 mS/m</td></tr>
<tr><td>0.00 to 2.00 mg/L</td><td>0.01 to 0.20 mg/L</td></tr>
<tr><td>0.0 to 20.0 mg/L</td><td>0.1 to 2.0 mg/L</td></tr>
<tr><td>0.0 to 50.0 mg/L</td><td>0.1 to 5.0 mg/L</td></tr>
<tr><td rowspan="10">Cell constant 0.1/cm</td><td>0.00 to 20.00 μS/cm</td><td>0.01 to 2.00 μS/cm</td></tr>
<tr><td>0.00 to 50.00 μS/cm</td><td>0.01 to 5.00 μS/cm</td></tr>
<tr><td>0.0 to 500.0 μS/cm</td><td>0.1 to 50.0 μS/cm</td></tr>
<tr><td>0.000 to 2.000 mS/m</td><td>0.001 to 0.200 mS/m</td></tr>
<tr><td>0.000 to 5.000 mS/m</td><td>0.001 to 0.500 mS/m</td></tr>
<tr><td>0.00 to 50.00 mS/m</td><td>0.01 to 5.00 mS/m</td></tr>
<tr><td>0.0 to 20.0 mg/L</td><td>0.1 to 2.0 mg/L</td></tr>
<tr><td>0 to 200 mg/L</td><td>1 to 20 mg/L</td></tr>
<tr><td>0 to 500 mg/L</td><td>1 to 50 mg/L</td></tr>
<tr><td rowspan="3">Cell constant 1.0/cm</td><td>0.0 to 200.0 μS/cm</td><td>0.1 to 20.0 μS/cm</td></tr>
<tr><td>0.00 to 20.00 mS/m</td><td>0.01 to 2.00 mS/m</td></tr>
<tr><td>0 to 200 mg/L</td><td>1 to 20 mg/L</td></tr>
<tr><td>Temp. input low limit
Temp. input high limit</td><td colspan="2">0.0 to 100.0℃</td><td>0.1 to 10.0℃</td></tr>
</table>
(Abbreviation: Temp.: Temperature)</td><td>Conductivity input: 0.001 μS/cm, Temperature input: 1.0℃</td></tr>
<tr><td>A12H
0.001</td><td colspan="2">A12 hysteresis
• Sets hysteresis of A12 High/Low limits independent action.
• For the indication condition and setting range, refer to [A11 hysteresis]. (p.28)</td><td>Conductivity input: 0.001 μS/cm, Temperature input: 1.0℃</td></tr>
<tr><td>A21H
0.001</td><td colspan="2">A21 hysteresis
• Sets hysteresis of A21 High/Low limits independent action.
• For the indication condition and setting range, refer to [A11 hysteresis]. (p.28)</td><td>Conductivity input: 0.001 μS/cm, Temperature input: 1.0℃</td></tr>
</table>

Character	Setting Item, Function, Setting Range	Factory Default
A2 2H 0.00 1	**A22 hysteresis**	Conductivity input: 0.001 μS/cm Temperature input: 1.0℃
	• Sets hysteresis of A22 High/Low limits independent action. • For the indication condition and setting range, refer to [A11 hysteresis]. (p.28)	
I Err oFF□	**A□□ output when input errors occur**	Disabled
	• Selects whether to enable or disable A□□ output in the event of an input error such as a conductivity sensor burnout or short circuit. If Enabled is selected, A□□ output and A□□ output status will be maintained in the event of an input error. If Disabled is selected, A□□ output and A□□ output status will be turned OFF in the event of an input error. • Available when Ec_L (Conductivity input low limit action), Ec_H (Conductivity input high limit action), TmPL (Temperature input low limit action) or TmPH (Temperature input high limit action) is selected in [A□□ type]. • Selection item: on□□: Enabled oFF□: Disabled	
FIT 1 □□0.0	**Conductivity input filter time constant**	0.0 seconds
	• Sets Conductivity input filter time constant. If the value is set too large, it affects A□□ output due to the delay of response. • Setting range: 0.0 to 10.0 seconds	
Cnd□ 0.000	**Conductivity input sensor correction**	0.000 μS/cm
	• Sets conductivity input sensor correction value. This corrects the measured value from the Conductivity Sensor. When a sensor cannot be set at the exact location where measurement is desired, the sensor-measured conductivity may deviate from the conductivity in the measured location. In such a case, desired conductivity can be obtained by adding a sensor correction value. However, it is effective within the measurement range regardless of the sensor correction value. Conductivity after sensor correction = Current conductivity + (Sensor correction value) • Setting range: ±10% of measurement span (*)	
3Elr □□□0	**3-electrode Conductivity Sensor resistance**	0 Ω
	• If the 3-electrode Conductivity Sensor is used, set the resistance value of 3-electrode Conductivity Sensor. • If the 3-electrode Conductivity Sensor is used, set the cell constant to 1.0/cm. Measurement will be made within the measurement range of cell constant 1.0/cm. See {Table 8.2-3) (p.22). • Setting range: 0 to 100 Ω	
dFcT □□20	**Conductivity inputs for moving average**	20
	• Set the number of conductivity inputs used to obtain moving average. An average conductivity input value is calculated using the selected number of conductivity inputs. The conductivity input value is replaced every input sampling period. However, the conductivity input moving average function is disabled in conductivity calibration mode or in temperature calibration mode. • Setting range: 1 to 120	

(*) The measurement unit and decimal point place follow the measurement range.

8.3 Temperature Input Group

To enter the Temperature Input Group, follow the procedure below.

① F.nc.2 Press the ◎ key twice in Conductivity/Temperature Display Mode.

② Tcn□ Press the SET/RESET key.

The unit will enter Temperature Input Group, and "Temperature compensation method" will appear.

Character	Setting Item, Function, Setting Range	Factory Default
Tcn□ nAcL	**Temperature compensation method** • Selects Temperature compensation calculation method. • nAcL : Temperature compensation is conducted using temperature characteristics of NaCl. Select when the main salt ingredient in a sample is NaCl. TcoE : Temperature compensation is conducted using temperature coefficient (%/℃) and a randomly selected reference temperature. PUrE : Temperature compensation is conducted using temperature characteristics of deionized water. oFF□ : No temperature compensation	NaCl
tcoE □2.00	**Temperature coefficient** • Sets the temperature coefficient. If temperature coefficient is set to 2.00 %/℃, this value can be used for most aqueous solutions. If temperature coefficient of an aqueous solution is already-known, set the value. If temperature coefficient is set to 0.00 %/℃, conductivity without temperature compensation will be indicated. • Available only when TcoE is selected in [Temperature compensation method]. • Setting range: -5.00 to 5.00 %/℃	2.00 %/℃
trnd □25.0	**Reference temperature** • Sets the reference temperature for temperature compensation. • Setting range: 5.0 to 95.0℃ (The placement of the decimal point follows the selection.)	25.0℃
dP2□ □□0.0	**Decimal point place** • Selects decimal point place. • □□□0 : No decimal point □□0.0 : 1 digit after decimal point	1 digit after decimal point
conE Pt□3	**Pt100 input wire type** • Selects the input wire type of Pt100. • Not available for the Temperature element Pt1000. This setting item and all subsequent items are available only when PV□□ (Measured value) is selected in [Temperature Display when no temperature compensation]. • Pt□2 : 2-wire type Pt□3 : 3-wire type	3-wire type
cAbL □□0.0	**Cable length correction** • Sets the cable length correction value. • Available only when Pt□2 (2-wire type) is selected in [Pt100 input wire type]. Not available for the Temperature element Pt1000. • Setting range: 0.0 to 100.0 m	0.0 m
cArEc □0.30	**Cable cross-section area** • Sets the cable cross-section area. • Available only when Pt□2 (2-wire type) is selected in [Pt100 input wire type]. Not available for the Temperature element Pt1000. • Setting range: 0.10 to 2.00 mm^2	0.30 mm^2
FLt2 □□0.0	**Temperature input filter time constant** • Sets Temperature input filter time constant. If the value is set too large, it affects A□□ output due to the delay of response. • Setting range: 0.0 to 10.0 seconds	0.0 seconds

Character	Setting Item, Function, Setting Range	Factory Default
dFcT 20	**Temperature inputs for moving average** • Set the number of temperature inputs used to obtain moving average. An average temperature input value is calculated using the selected number of temperature inputs. The temperature input value is replaced every input sampling period. However, the temperature input moving average function is disabled in temperature calibration mode. • Setting range: 1 to 120	20

8.4 Basic Function Group

To enter the Basic Function Group, follow the procedure below.

① o.T.E.r Press the key 3 times in Conductivity/Temperature Display Mode.

② Lock Press the SET/RESET key.

The unit will enter the Basic Function Group, and “Set value lock” will appear.

Character	Setting Item, Function, Setting Range	Factory Default
Lock ----	**Set value lock** • Locks the set values to prevent setting errors. • Selection item: ---- (Unlock): All set values can be changed. Loc 1 (Lock 1): None of the set values can be changed. Loc2 (Lock 2): Only A11, A12, A21 and A22 values can be changed. Loc3 (Lock 3): All set values – except Sensor cell constant, Measurement unit, Measurement range, Conductivity Zero and Span adjustment values, Temperature calibration value, Transmission output 1 Zero and Span adjustment values, Transmission output 2 Zero and Span adjustment values – can be temporarily changed. However, they revert to their previous value after the power is turned off because they are not saved in the non-volatile IC memory. Do not change the A11, A12, A21 or A22 type. If they are changed, they will affect other setting items. Be sure to select Lock 3 when changing the set value frequently via software communication. (If a value set via software communication is the same as the value before the setting, the value will not be written in non-volatile IC memory.)	Unlock
cmhL nonL	**Communication protocol** • Selects communication protocol. • Selection item: nonL: Shinko protocol modA: MODBUS ASCII mode modr: MODBUS RTU mode	Shinko protocol
cmno 0	**Instrument number** • Sets the instrument number of each unit. (The instrument numbers should be set one by one when multiple instruments are connected.) • Setting range: 0 to 95	0
cmhP 96	**Communication speed** • Selects a communication speed equal to that of the host computer. • Selection item: 96: 9600 bps 192: 19200 bps 384: 38400 bps	9600 bps
cmFT 7Eun	**Data bit/Parity** • Selects data bit and parity. • Selection item: 8non : 8 bits/No parity 7non : 7 bits/No parity 8Eun : 8 bits/Even 7Eun : 7 bits/Even 8odd : 8 bits/Odd 7odd : 7 bits/Odd	7 bits/Even

Character	Setting Item, Function, Setting Range	Factory Default
cnsr □□□ 1	**Stop bit** • Selects the stop bit. • Selection item: □□□1 : 1 bit □□□2 : 2 bits	1 bit
Fro 1 Ec□□	**Transmission output 1 type** • Selects Transmission output 1 type. If oFF□ (No temperature compensation) is selected in [Temperature compensation method (p.30)], and if rEnP (Temperature transmission) is selected, then Transmission output 1 value will differ depending on the selection in [Temperature Display when no temperature compensation (p.34)] as follows. If oFF□ (Unlit) or Srd□ (Reference temperature) is selected, the value set in [Reference temperature (p.30)] will be output. If PV□□ (Measured value) is selected, the measured value will be output. • Available when Transmission output 1 (TA option) or Transmission output 2 (TA2 option) is ordered. • Selection item: Ec□□: Conductivity transmission rEnP: Temperature transmission	Conductivity transmission
FrH 1 2.000	**Transmission output 1 high limit** • Sets Transmission output 1 high limit value. (This value correponds to 20 mA DC output.) If Transmission output 1 high limit and low limit are set to the same value, Transmission output 1 will be fixed at 4 mA DC. • Available when Transmission output 1 (TA option) or Transmission output 2 (TA2 option) is ordered. • Setting range: If Ec□□ (Conductivity transmission) is selected in [Transmission output 1 type]: Transmission output 1 low limit to Conductivity range high limit If rEnP (Temperature transmission) is selected in [Transmission output 1 type]: Transmission output 1 low limit to 100.0℃	2.000 μS/cm
FrL 1 0.000	**Transmission output 1 low limit** • Sets Transmission output 1 low limit value. (This value correponds to 4 mA DC output.) If Transmission output 1 high limit and low limit are set to the same value, Transmission output 1 will be fixed at 4 mA DC. • Available when Transmission output 1 (TA option) or Transmission output 2 (TA2 option) is ordered. • Setting range: If Ec□□ (Conductivity transmission) is selected in [Transmission output 1 type]: Conductivity range low limit to Transmission output 1 high limit If rEnP (Temperature transmission) is selected in [Transmission output 1 type]: 0.0℃ to Transmission output 1 high limit	0.000 μS/cm
Fro2 rEnP	**Transmission output 2 type** • Selects Transmission output 2 type. If oFF□ (No temperature compensation) is selected in [Temperature compensation method (p.30)], and if rEnP (Temperature transmission) is selected, then Transmission output 2 value will differ depending on the selection in [Temperature Display when no temperature compensation (p.34)] as follows. If oFF□ (Unlit) or Srd□ (Reference temperature) is selected, the value set in [Reference temperature (p.30)] will be output. If PV□□ (Measured value) is selected, the measured value will be output. • Available only when Transmission output 2 (TA2 option) is ordered. • Selection item: Ec□□: Conductivity transmission rEnP: Temperature transmission	Temperature transmission

Character	Setting Item, Function, Setting Range	Factory Default
rH2 100.0	**Transmission output 2 high limit** • Sets Transmission output 2 high limit value. (This value correponds to 20 mA DC output.) If Transmission output 2 high limit and low limit are set to the same value, Transmission output 2 will be fixed at 4 mA DC. • Available only when Transmission output 2 (TA2 option) is ordered. • Setting range: If Ec□□ (Conductivity transmission) is selected in [Transmission output 2 type]: Transmission output 2 low limit to Conductivity range high limit If TEMP (Temperature transmission) is selected in [Transmission output 2 type]: Transmission output 2 low limit to 100.0℃	100.0℃
rL2 □□0.0	**Transmission output 2 low limit** • Sets Transmission output 2 low limit value. (This value correponds to 4 mA DC output.) If Transmission output 2 high limit and low limit are set to the same value, Transmission output 2 will be fixed at 4 mA DC. • Available only when Transmission output 2 (TA2 option) is ordered. • Setting range: If Ec□□ (Conductivity transmission) is selected in [Transmission output 2 type]: Conductivity range low limit to Transmission output 2 high limit If TEMP (Temperature transmission) is selected in [Transmission output 2 type]: 0.0℃ to Transmission output 2 high limit	0.0℃
rc1 bEFH	**Transmission output 1 status when calibrating** • Selects Transmission output 1 output status when calibrating conductivity. • Available when Transmission output 1 (TA option) or Transmission output 2 (TA2 option) is ordered. • Selection item: bEFH: Last value HOLD (Retains the last value before conductivity calibration, and outputs it.) SETH: Set value HOLD (Outputs the value set in [Transmission output 1 value HOLD when calibrating].) PVH□: Measured value (Outputs the measured value when calibrating conductivity.)	Last value HOLD
rh1 0.000	**Transmission output 1 value HOLD when calibrating** • Sets Transmission output 1 value HOLD. • Available only when SETH (Set value HOLD) is selected in [Transmission output 1 status when calibrating]. • Setting range: When Ec□□ (Conductivity transmission) is selected in [Transmission output 1 type]: Conductivity range low limit to Conductivity range high limit When TEMP (Temperature transmission) is selected in [Transmission output 1 type]: 0.0 to 100.0℃	Conductivity transmission: 0.000 μS/cm Temperature transmission: 0.0℃
rc2 bEFH	**Transmission output 2 status when calibrating** • Selects Transmission output 2 output status when calibrating conductivity. • Available only when Transmission output 2 (TA2 option) is ordered. • Selection item: bEFH: Last value HOLD (Retains the last value before conductivity calibration, and outputs it.) SETH: Set value HOLD (Outputs the value set in [Transmission output 2 value HOLD when calibrating].) PVH□: Measured value (Outputs the measured value when calibrating conductivity.)	Last value HOLD

Character	Setting Item, Function, Setting Range	Factory Default
Tr52 □□0.0	**Transmission output 2 value HOLD when calibrating** • Sets Transmission output 2 value HOLD. • Available only when SETH (Set value HOLD) is selected in [Transmission output 2 status when calibrating]. • Setting range: When Ec□□ (Conductivity transmission) is selected in [Transmission output 2 type]: Conductivity range low limit to Conductivity range high limit When TEMP (Temperature transmission) is selected in [Transmission output 2 type]: 0.0 to 100.0℃	Conductivity transmission: 0.000 μS/cm Temperature transmission: 0.0℃
LIGT -.-.-.-	**Auto-light function** • Selects Auto-light Enabled/Disabled. • Selection item: -.-.-.- : Disabled USE□ : Enabled	Disabled
diSP ALL□	**Display selection** • Selects items to be indicated on the Conductivity Display and Temperature Display. • Selection item:	Conductivity/Temperature

	Conductivity Display	Temperature Display
ALL□	Conductivity	Temperature
Ec□□	Conductivity	No indication
TEMP	No indication	Temperature
none	No indication	No indication

TIME 00.00	**Indication time** • Sets the indication time of the displays from no key operation until displays go off. Displays remain lit when set to 00.00. If any errors occur or any key is pressed while in unlit status, the display will light up. • Not available if none (No indication) is selected in [Display selection]. • Setting range: 00.00 (Remains lit) 00.01 to 60.00 (Minutes.Seconds)	00.00
oFdP oFF□	**Temperature Display when no temperature compensation** • Selects an item to be indicated on the Temperature Display when oFF□ (No temperature compensation) is selected in [Temperature compensation method]. The placement of the decimal point for the reference temperature follows the selection. • Available only when oFF□ (No temperature compensation) is selected in [Temperature compensation method]. • Selection item: oFF□: Unlit STd□: Reference temperature PV□□: Measured value	Unlit

Character	Setting Item, Function, Setting Range	Factory Default
A1oF A11□	**A1 output allocation** • Selects A1 output allocation. For A1 output, A11 type, A12 type, A21 type and/or A22 type can be allocated. Output is OR output. • Not available if Transmission output 2 (TA2 option) is ordered. • Selection item: A11□ : A11 type A12□ : A12 type A21□ : A21 type A22□ : A22 type A1AL : A11, A12 types A2AL : A21, A22 types A1A2 : A11, A21 types A2A2 : A12, A22 types ALL□ : A11, A12, A21, A22 types	A11 type
A2oF A21□	**A2 output allocation** • Selects A2 output allocation. For A2 output, A11 type, A12 type, A21 type and/or A22 type can be allocated. Output is OR output. • Not available if Transmission output 1 (TA option) or Transmission output 2 (TA2 option) is ordered. • Selection items are the same as those of A1 output allocation. (p.35)	A21 type
oon1 □□□0	**Output ON time when A1 output ON** • Sets Output ON time when A1 output is ON. If Output ON time and OFF time are set, A1 output can be turned ON/OFF in a configured cycle when A1 output is ON. (Fig. 8.4-1) • Not available if Transmission output 2 (TA2 option) is ordered. • Setting range: 0 to 9999 seconds **Timing chart (Output ON time and OFF time when A1 output is ON)** 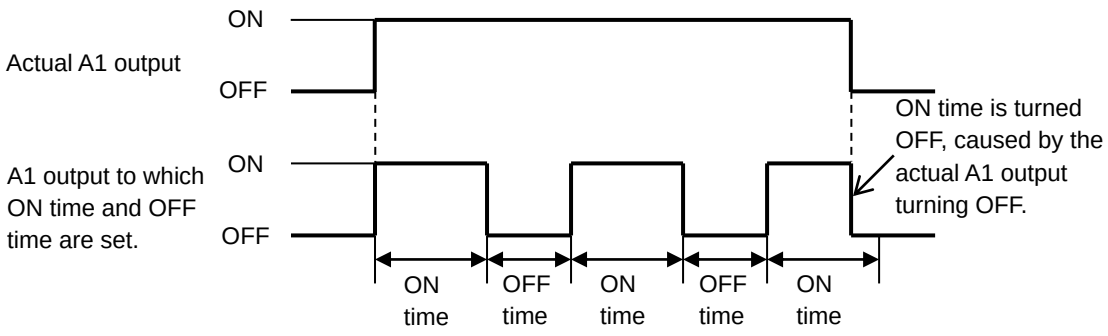 (Fig. 8.4-1)	0 seconds

Character	Setting Item, Function, Setting Range	Factory Default
oFF1 □□□0	**Output OFF time when A1 output ON** • Sets Output OFF time when A1 output is ON. If Output ON time and OFF time are set, A1 output can be turned ON/OFF in a configured cycle when A1 output is ON. (Fig. 8.4-1) (p.35) • Not available if Transmission output 2 (TA2 option) is ordered. • Setting range: 0 to 9999 seconds	0 seconds
onF2 □□□0	**Output ON time when A2 output ON** • Sets Output ON time when A2 output is ON. If Output ON time and OFF time are set, A2 output can be turned ON/OFF in a configured cycle when A2 output is ON. (Fig. 8.4-1) (p.35) • Not available if Transmission output 1 (TA option) or Transmission output 2 (TA2 option) is ordered. • Setting range: 0 to 9999 seconds	0 seconds
oFF2 □□□0	**Output OFF time when A2 output ON** • Sets Output OFF time when A2 output is ON. If Output ON time and OFF time are set, A2 output can be turned ON/OFF in a configured cycle when A2 output is ON. (Fig. 8.4-1) (p.35) • Not available if Transmission output 1 (TA option) or Transmission output 2 (TA2 option) is ordered. • Setting range: 0 to 9999 seconds	0 seconds
A1E□ ----	**A1 conductivity input error alarm A□□ type** • Selects an A□□ type in order to assess A1 conductivity input error alarm. • Not available if Transmission output 2 (TA2 option) is ordered. • Selection item ---- : No action A11□ : A11 type A12□ : A12 type A21□ : A21 type A22□ : A22 type	No action
A2E□ ----	**A2 conductivity input error alarm A□□ type** • Selects A□□ type in order to assess A2 conductivity input error alarm. • Not available if Transmission output 1 (TA option) or Transmission output 2 (TA2 option) is ordered. • Selection item ---- : No action A11□ : A11 type A12□ : A12 type A21□ : A21 type A22□ : A22 type	No action

Character	Setting Item, Function, Setting Range	Factory Default
A1Eo 0.000	**A1 conductivity input error alarm band when A□□ output ON** • Sets the band to assess A1 conductivity input error alarm when A□□ output is ON. Refer to 'Conductivity Input Error Alarm' on p.38. • Not available if Transmission output 2 (TA2 option) is ordered. • Setting range: Conductivity range low limit to Conductivity range high limit When set to 0.000, Conductivity input error alarm is disabled.	0.000 μS/cm
A1oT □□□0	**A1 conductivity input error alarm time when A□□ output ON** • Sets time to assess A1 conductivity input error alarm when A□□ output is ON. Refer to 'Conductivity Input Error Alarm' on p.38. • Not available if Transmission output 2 (TA2 option) is ordered. • Setting range: 0 to 9999 seconds or minutes (Time unit follows the selection in [Conductivity input error alarm time unit].) When set to 0, Conductivity input error alarm is disabled.	0 seconds
A1Ec 0.000	**A1 conductivity input error alarm band when A□□ output OFF** • Sets the band to assess A1 conductivity input error alarm when A□□ output is OFF. Refer to 'Conductivity Input Error Alarm' on p.38. • Not available if Transmission output 2 (TA2 option) is ordered. • Setting range: Conductivity range low limit to Conductivity range high limit When set to 0.000, Conductivity input error alarm is disabled.	0.000 μS/cm
A1cT □□□0	**A1 conductivity input error alarm time when A□□ output OFF** • Sets time to assess A1 conductivity input error alarm when A□□ output is OFF. Refer to 'Conductivity Input Error Alarm' on p.38. • Not available if Transmission output 2 (TA2 option) is ordered. • Setting range: 0 to 9999 seconds or minutes (Time unit follows the selection in [Conductivity input error alarm time unit].) When set to 0, Conductivity input error alarm is disabled.	0 seconds
A2Eo 0.000	**A2 conductivity input error alarm band when A□□ output ON** • Sets the band to assess A2 conductivity input error alarm when A□□ output is ON. Refer to 'Conductivity Input Error Alarm' on p.38. • Not available if Transmission output 1 (TA option) or Transmission output 2 (TA2 option) is ordered. • Setting range: Conductivity range low limit to Conductivity range high limit When set to 0.000, Conductivity input error alarm is disabled.	0.000 μS/cm

Character	Setting Item, Function, Setting Range	Factory Default
A2oT □□□0	**A2 conductivity input error alarm time when A□□ output ON** • Sets time to assess A2 conductivity input error alarm when A□□ output is ON. Refer to 'Conductivity Input Error Alarm' on p.38. • Not available if Transmission output 1 (TA option) or Transmission output 2 (TA2 option) is ordered. • Setting range: 0 to 9999 seconds or minutes (Time unit follows the selection in [Conductivity input error alarm time unit].) When set to 0, Conductivity input error alarm is disabled.	0 seconds
A2Ec 0.000	**A2 conductivity input error alarm band when A□□ output OFF** • Sets the band to assess A2 conductivity input error alarm when A□□ output is OFF. Refer to 'Conductivity Input Error Alarm' on p.38. • Not available if Transmission output 1 (TA option) or Transmission output 2 (TA2 option) is ordered. • Setting range: Conductivity range low limit to Conductivity range high limit When set to 0.000, Conductivity input error alarm is disabled.	0.000 μS/cm
A2cT □□□0	**A2 conductivity input error alarm time when A□□ output OFF** • Sets time to assess A2 conductivity input error alarm when A□□ output is OFF. Refer to 'Conductivity Input Error Alarm' on p.38. •Not available if Transmission output 1 (TA option) or Transmission output 2 (TA2 option) is ordered. • Setting range: 0 to 9999 seconds or minutes (Time unit follows the selection in [Conductivity input error alarm time unit].) When set to 0, Conductivity input error alarm is disabled.	0 seconds
n_tU tEc□	**Conductivity input error alarm time unit** • Selects conductivity input error alarm time unit. • Selection item: tEc□ : Second(s) nI n□ : Minute(s)	Second(s)

• **Conductivity Input Error Alarm**

Conductivity input error alarm is used for detecting actuator trouble.

Even if Conductivity input error alarm time has elapsed – if conductivity input does not become higher than conductivity input error alarm band – the instrument assumes that actuator trouble has occurred, and sets Status flag 2.

In Serial communication, status can be read by reading Status flag 2 (A1, A2 conductivity input error alarm output flag bit).

Conductivity input error alarm is disabled during Conductivity Zero or Span adjustment.

Conductivity input error alarm is enabled only when Ec_L (Conductivity input low limit action) or Ec_H (Conductivity input high limit action) is selected in [A11, A12, A21, A22 type (pp.23, 24)].

9. Calibration

Conductivity calibration mode, Temperature calibration mode, and Transmission output 1 and 2 adjustment modes are described below.

9.1 Conductivity Calibration Mode

Deterioration of the 2-electrode Conductivity Sensor might cause the cell constant to change.
To correct the changed cell constant, conductivity calibration must be performed.
Calibrate Conductivity Zero adjustment first, followed by Conductivity Span adjustment.
During conductivity calibration, A□□ action is forced OFF.

However, if Loc 1 (Lock 1), Loc2 (Lock 2) or Loc3 (Lock 3) is selected in [Set value lock (p.31)], the unit cannot move to Conductivity calibration mode.

The following outlines the procedure for conductivity calibration.

① When selecting bEFH (Last value HOLD) in [Transmission output 1 status when calibrating (p.33)] or [Transmission output 2 status when calibrating (p.33)], select it while the 2-electrode Conductivity Sensor is being immersed in the solution currently measured.

② Do not immerse the 2-electrode Conductivity Sensor in the standard solution.

③ Press and hold the ▽ key and ◎ key (in that order) together for 3 seconds in Conductivity/ Temperature Display Mode.
The unit enters Conductivity calibration Zero adjustment mode, and indicates the following.

Display	Indication
Conductivity Display	AdJ3 and conductivity are indicated alternately.
Temperature Display	Conductivity Zero adjustment value

④ Set the Conductivity Zero adjustment value with the △ or ▽ key so that the conductivity becomes 0.
If conductivity is 0, this adjustment is not necessary.
Setting range of the Conductivity Zero adjustment value differs depending on the measurement range. See (Table 9.1-1.). (p. 40)
However, it is effective within the measurement range regardless of the Conductivity Zero adjustment value.

(Table 9.1-1)

Measurement Range		Conductivity Zero Adjustment Value Setting Range
Cell constant 0.01/cm	2.000 μS/cm	-0.200 to 0.200 μS/cm
	20.00 μS/cm	-2.00 to 2.00 μS/cm
	50.00 μS/cm	-5.00 to 5.00 μS/cm
	0.200 mS/m	-0.020 to 0.020 mS/m
	2.000 mS/m	-0.200 to 0.200 mS/m
	5.000 mS/m	-0.500 to 0.500 mS/m
	2.00 mg/L	-0.20 to 0.20 mg/L
	20.0 mg/L	-2.0 to 2.0 mg/L
	50.0 mg/L	-5.0 to 5.0 mg/L
Cell constant 0.1/cm	20.00 μS/cm	-2.00 to 2.00 μS/cm
	50.00 μS/cm	-5.00 to 5.00 μS/cm
	500.0 μS/cm	-50.0 to 50.0 μS/cm
	2.000 mS/m	-0.200 to 0.200 mS/m
	5.000 mS/m	-0.500 to 0.500 mS/m
	50.00 mS/m	-5.00 to 5.00 mS/m
	20.0 mg/L	-2.0 to 2.0 mg/L
	200 mg/L	-20 to 20 mg/L
	500 mg/L	-50 to 50 mg/L
Cell constant 1.0/cm	200.0 μS/cm	-20.0 to 20.0 μS/cm
	20.00 mS/m	-2.00 to 2.00 mS/m
	200 mg/L	-20 to 20 mg/L

⑤ Press the SET/RESET key.

Conductivity Zero adjustment value will be registered, and the unit will move to Conductivity calibration Span adjustment mode.

The following is indicated in Conductivity calibration Span adjustment mode.

Display	Indication
Conductivity Display	AdJ5 and conductivity are indicated alternately.
Temperature Display	Conductivity Span adjustment value

⑥ Immerse the 2-electrode Conductivity Sensor in the standard solution.

⑦ Set the Conductivity Span adjustment value with the △ or ▽ key, checking the conductivity. Conductivity multiplied by the Span adjustment value is displayed.

Conductivity Span adjustment value: 0.700 to 1.300

⑧ Press the SET/RESET key.

Conductivity Span adjustment value will be registered, and the unit will revert to Conductivity/ Temperature Display Mode.

9.2 Temperature Calibration Mode

To calibrate a temperature, set a temperature calibration value.
If oFF (No temperature compensation) is selected in [Temperature compensation method (p.30)], Temperature calibration mode is not available.

The unit cannot enter Temperature calibration mode in the following cases:
• When Loc 1 (Lock 1), Loc2 (Lock 2) or Loc3 (Lock 3) is selected in [Set value lock (p.31)].

When a sensor cannot be set at the exact location where measurement is desired, the resulting measured temperature may deviate from the temperature in the desired location. In this case, the desired temperature can be set for the desired location by setting a temperature calibration value. However, it is effective within the input rated range regardless of the temperature calibration value.
Temperature after calibration = Current temperature + (Temperature calibration value)
(e.g.) When current temperature is 23.5℃,
If temperature calibration value is set to 1.5℃: 23.5 + (1.5) = 25.0℃
If temperature calibration value is set to -1.5℃: 23.5 + (-1.5) = 22.0℃

The following outlines the procedure for temperature calibration.

① Press and hold the △ key and ◎ key (in that order) together for 3 seconds in Conductivity/ Temperature Display Mode.
The unit proceeds to Temperature calibration mode, and indicates the following.

Display	Indication
Conductivity Display	to and temperature are indicated alternately.
Temperature Display	Temperature calibration value

② Set a temperature calibration value with the △ or ▽ key, checking temperature.
Setting range: -10.0 to 10.0℃

③ Press the SET/RESET key.
Temperature calibration is complete, and the unit reverts to Conductivity/Temperature Display Mode.

9.3 Transmission Output 1 Adjustment Mode

Fine adjustment of Transmission output 1 is performed.
WIL-102-ECL is adjusted at the factory, however, differences may occur between the indication value of the connected equipment (recorders, etc.) and output value of this instrument.
In this case, perform Transmission output 1 Zero and Span adjustments.
Transmission output 1 adjustment mode is available when Transmission output 1 (TA option) or Transmission output 2 (TA2 option) is ordered.

The unit cannot enter Transmission output 1 Zero adjustment mode in the following cases:

- During Conductivity Zero or Span adjustment, or temperature calibration
- When Loc 1 (Lock 1), Loc2 (Lock 2) or Loc3 (Lock 3) is selected in [Set value lock (p.31)]

The following outlines the procedure for Transmission output 1 adjustment.

① Press and hold the △ key and SET/RESET key (in that order) together for 3 seconds in Conductivity/Temperature Display Mode.
The unit enters Transmission output 1 Zero adjustment mode, and indicates the following.

Display	Indication
Conductivity Display	AJ1 1
Temperature Display	Transmission output 1 Zero adjustment value

② Set a Transmission output 1 Zero adjustment value with the △ or ▽ key, while viewing the value indicated on the connected equipment (recorders, etc.).
Setting range: ±5.00% of Transmission output 1 span

③ Press the SET/RESET key.
The unit enters Transmission output 1 Span adjustment mode, and indicates the following.

Display	Indication
Conductivity Display	AJ5 1
Temperature Display	Transmission output 1 Span adjustment value

④ Set a Transmission output 1 Span adjustment value with the △ or ▽ key, while viewing the value indicated on the connected equipment (recorders, etc.).
Setting range: ±5.00% of Transmission output 1 span

⑤ Press the ◯ key.
The unit reverts to Transmission output 1 Zero adjustment mode.
Repeat steps ② to ⑤ if necessary.

⑥ To finish Transmission output 1 adjustment, press the SET/RESET key in Transmission output 1 Span adjustment mode.
The unit reverts to Conductivity/Temperature Display Mode.

9.4 Transmission Output 2 Adjustment Mode

Fine adjustment of Transmission output 2 is performed.
WIL-102-ECL is adjusted at the factory, however, differences may occur between the indication value of the connected equipment (recorders, etc.) and output value of this instrument.
In this case, perform Transmission output 2 Zero and Span adjustments.
Transmission output 2 adjustment mode is available only when Transmission output 2 (TA2 option) is ordered.

The unit cannot enter Transmission output 2 Zero adjustment mode in the following cases:
- During Conductivity Zero or Span adjustment, or temperature calibration
- When Loc 1 (Lock 1), Loc2 (Lock 2) or Loc3 (Lock 3) is selected in [Set value lock (p.31)]

The following outlines the procedure for Transmission output 2 adjustment.

① Press and hold the ▽ key and SET/RESET key (in that order) together for 3 seconds in Conductivity/Temperature Display Mode.
The unit enters Transmission output 2 Zero adjustment mode, and indicates the following.

Display	Indication
Conductivity Display	AJ2
Temperature Display	Transmission output 2 Zero adjustment value

② Set a Transmission output 2 Zero adjustment value with the △ or ▽ key, while viewing the value indicated on the connected equipment (recorders, etc.).
Setting range: ±5.00% of Transmission output 2 span

③ Press the SET/RESET key.
The unit enters Transmission output 2 Span adjustment mode, and indicates the following.

Display	Indication
Conductivity Display	AJ42
Temperature Display	Transmission output 2 Span adjustment value

④ Set a Transmission output 2 Span adjustment value with the △ or ▽ key, while viewing the value indicated on the connected equipment (recorders, etc.).
Setting range: ±5.00% of Transmission output 2 span

⑤ Press the ◯ key.
The unit reverts to Transmission output 2 Zero adjustment mode.
Repeat steps ② to ⑤ if necessary.

⑥ To finish Transmission output 2 adjustment, press the SET/RESET key in Transmission output 2 Span adjustment mode.
The unit reverts to Conductivity/Temperature Display Mode.

10. Measurement

10.1 Starting Measurement

After mounting to the control panel, wiring, setup and calibration are complete, turn the power to the instrument ON.

For approximately 4 seconds after the power is switched ON, the input characters are indicated on the Conductivity Display and Temperature Display. See (Table 10.1-1).

(Table 10.1-1)

Display	Character	Measurement Unit	
Conductivity Display	conD	Conductivity (μS/cm)	
	SI □□	Conductivity (mS/m)	
	rd5□	TDS conversion (mg/L)	
Display	**Character**	**Input Temperature Specification (*)**	**Selection Item in [Pt100 Input Wire Type] (p.30)**
Temperature Display	Pr□2	Pt100	Pr□2: 2-wire type
	Pr□3		Pr□3: 3-wire type
	Pr 10	Pt1000	

(*) This input temperature specification was specified at the time of ordering.

During this time, all outputs are in OFF status, and the LED indicators except PWR Indicator are unlit. Measurement will then start, indicating the item selected in [Display selection (p.34)].

10.2 A□□ Output

When Ec_L (Conductivity input low limit action), Ec_H (Conductivity input high limit action), rmPL (Temperature input low limit action), or rmPH (Temperature input high limit action) is selected in [A11, A12, A21, A22 type (pp. 23, 24)], the A□□ output is turned ON if the measured value exceeds or drops below the A□□ value.

When EcHL ((Conductivity input High/Low limits independent action), rmHL (Temperature input High/Low limits independent action) is selected in [A11, A12, A21, A22 type (pp. 23, 24)], the A□□ output is turned ON if the measured value exceeds the A□□ High/Low limits independent action upper side span or drops below the lower side span.

A1 or A2 output is turned ON depending on the selection in [A1/A2 output allocation (p.35)] and in [Output ON time/OFF time when A1/A2 output is ON (pp. 35, 36)].

If Output ON time and OFF time are set, A1 or A2 output can be turned ON/OFF in a configured cycle when A1 or A2 output is ON. (Fig. 10.2-1)

Timing chart (Output ON time and OFF time when A1 output is ON)

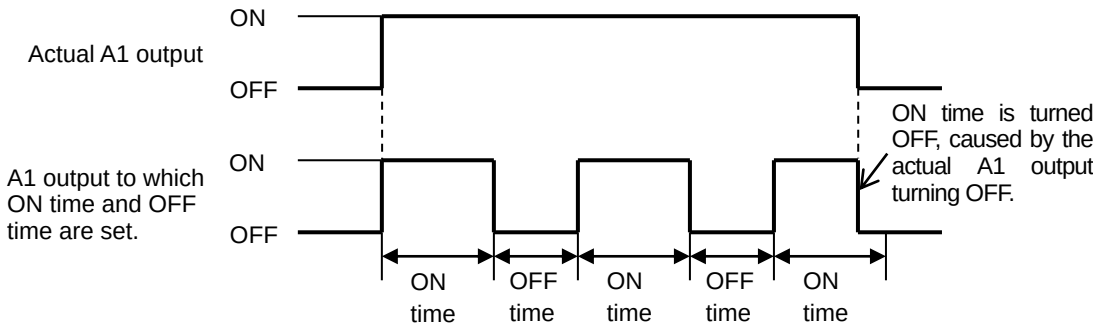

(Fig. 10.2-1)

A□□ output status can be read by reading Status flag 1 (A11, A12, A21, A22 output flag bit) in Serial communication.

A□□ output status, when input errors occur, differs depending on the selection in [A□□ output when input errors occur (p.29)].

- If oFF□ (Disabled) is selected, A□□ output and A□□ output status will be turned OFF when input errors occur.
- If on□□ (Enabled) is selected, A□□ output and A□□ output status will be maintained when input errors occur.

10.3 Conductivity Input Error Alarm

Conductivity input error alarm is used for detecting actuator trouble.
Even if conductivity input error alarm time (pp. 37, 38) has elapsed, and if conductivity input does not become higher than conductivity input error alarm band (pp. 37, 38), the unit assumes that actuator trouble has occurred, and writes Status flag 2.
In Serial communication, status can be read by reading Status flag 2 (A1, A2 conductivity input error alarm output flag bit).

Conductivity input error alarm is disabled during Conductivity Zero or Span adjustment.

Conductivity input error alarm is enabled only when Ec_L (Conductivity input low limit action) or Ec_H (Conductivity input high limit action) is selected in [A11, A12, A21, A22 type (pp.23, 24)].

10.4 Error Output

If Error (Error output) is selected in [A11, A12, A21, A22 type (pp. 23, 24)], the A1 or A2 output will be turned ON when error type is “Error”. See (Table 10.6-1).

10.5 Fail Output

If FAIL (Fail output) is selected in [A11, A12, A21, A22 type (pp. 23, 24)], the A1 or A2 output will be turned ON when error type is “Fail”. See (Table 10.6-1).

10.6 Error Code during Measurement

For Temperature sensor error or outside temperature compensation range during measurement, their corresponding error codes flash on the Temperature Display as shown below in (Table 10.6-1).

(Table 10.6-1)

Error Code	Error Type	Error Contents	Description	Occurrence
Er01	Fail	Temperature sensor burnout	Temperature sensor lead wire is burnt out.	When measuring or calibrating
Er02	Fail	Temperature sensor short-circuited	Temperature sensor lead wire is short-circuited.	
Er03	Error	Outside temperature compensation range	Measured temperature has exceeded 110.0℃.	
Er04	Error	Outside temperature compensation range	Measured temperature is less than 0.0℃.	

10.7 Transmission Output 1 and 2

Converting conductivity or temperature to analog signal every input sampling period, outputs in current. (Factory default: Transmission output 1: Conductivity, Transmission output 2: Temperature)

If oFF□ (No temperature compensation) is selected in [Temperature compensation method (p.30)], and if TEMP (Temperature transmission) is selected in [Transmission output 1 or 2 type (p.32)], Transmission output 1 or 2 value differs depending on the selection in [Temperature Display when no temperature compensation (p.34)].

- If oFF□ (Unlit) or Std□ (Reference temperature) is selected, the value set in [Reference temperature (p.30)] will be output.
- If PV□□ (Measured value) is selected, the measured value will be output.

If Transmission output 1 high limit and low limit are set to the same value, Transmission output 1 will be fixed at 4 mA DC.
If Transmission output 2 high limit and low limit are set to the same value, Transmission output 2 will be fixed at 4 mA DC.

Resolution	12000
Current	4 to 20 mA DC (Load resistance: Max 550 Ω)
Output accuracy	Within ±0.3% of Transmission output 1 or 2 span

11. Communication

11.1 System Configuration Example

When Using USB Communication Cable CMC-001-3 (sold separately)

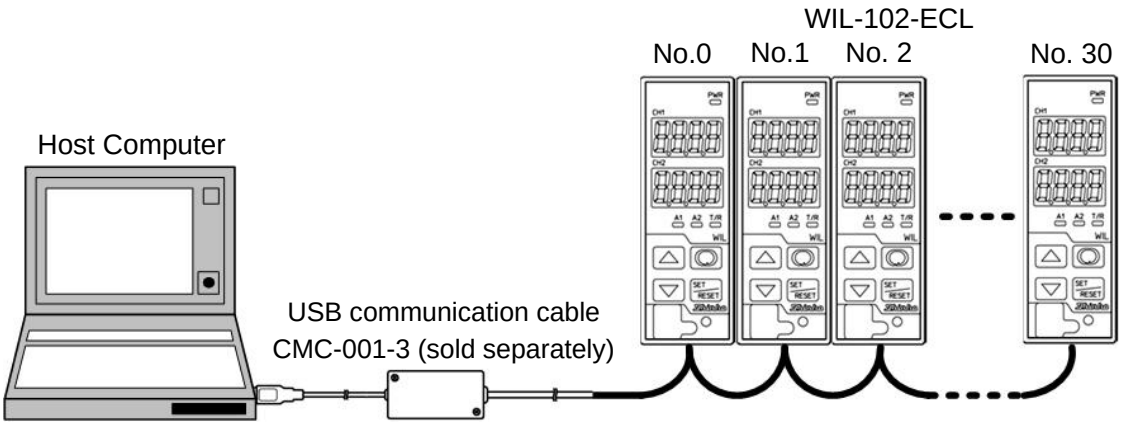

(Fig. 11.1-1)

When Using Communication Converter IF-400 (sold separately)

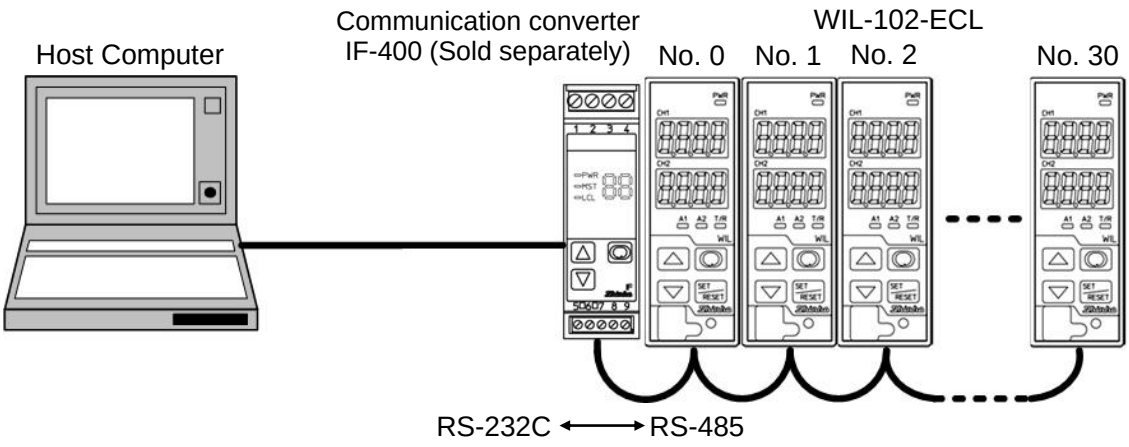

(Fig. 11.1-2)

11.2 Setting Method of the Conductivity Meter

Communication parameters can be set in the Basic Function Group.

To enter the Basic Function Group, follow the procedure below.

① o.T.E.r Press the [key] key 3 times in Conductivity/Temperature Display Mode.

② cmHL Press the [SET/RESET] key twice. “Communication protocol” will appear.

③ Set each item. (Use the [△] or [▽] key for settings, and register the selection/value with the [SET/RESET] key.)

Character	Setting Item, Function, Setting Range	Factory Default
cmHL nonL	**Communication protocol** • Selects communication protocol. • Selection item: nonL : Shinko protocol modA : MODBUS ASCII mode modr : MODBUS RTU mode	Shinko protocol
cmno □□□0	**Instrument number** • Sets the instrument number. The instrument numbers should be set one by one when multiple instruments are connected in Serial communication, otherwise communication is impossible. • Setting range: 0 to 95	0
cmHP □□96	**Communication speed** • Selects a communication speed equal to that of the host computer. • Selection item: □□96 : 9600 bps □192 : 19200 bps □384 : 38400 bps	9600 bps
cmFT 7EVn	**Data bit/Parity** • Selects data bit and parity. • Selection item: 8non : 8 bits/No parity 7non : 7 bits/No parity 8EVn : 8 bits/Even 7EVn : 7 bits/Even 8odd : 8 bits/Odd 7odd : 7 bits/Odd	7 bits/Even
cmHT □□□1	**Stop bit** • Selects the stop bit. • Selection item: □□□1 : 1 bit □□□2 : 2 bits	1 bit

④ Press the [SET/RESET] key multiple times.

The unit reverts to Conductivity/Temperature Display Mode.

11.3 Communication Procedure

Communication starts with command transmission from the host computer (hereafter Master) and ends with the response of the WIL-102-ECL (hereafter Slave).

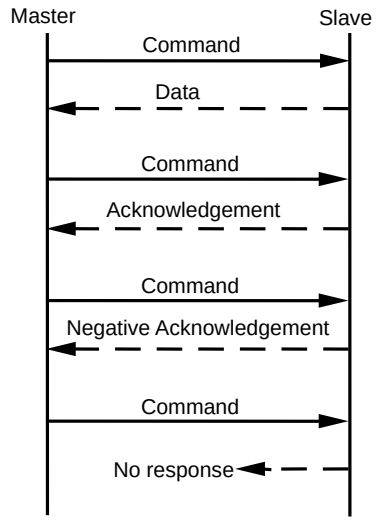

(Fig. 11.3-1)

- **Response with Data**
  When the master sends the reading command, the slave responds with the corresponding set value or current status.
- **Acknowledgement**
  When the master sends the setting command, the slave responds by sending acknowledgement after the processing is terminated.
- **Negative Acknowledgement**
  When the master sends a non-existent command or value out of the setting range, the slave returns a negative acknowledgement.
- **No Response**
  The slave will not respond to the master in the following cases:
  - Global address (Shinko protocol) is set.
  - Broadcast address (MODBUS protocol) is set.
  - Communication error (framing error, parity error)
  - Checksum error (Shinko protocol), LRC discrepancy (MODBUS ASCII mode), CRC-16 discrepancy (MODBUS RTU mode)

Communication Timing of the RS-485

Master Side (Take note while programming)

When the master starts transmission through the RS-485 communication line, the master is arranged so as to provide an idle status (mark status) transmission period of 1 or more characters before sending the command to ensure synchronization on the receiving side.

Set the program so that the master can disconnect the transmitter from the communication line within a 1-character transmission period after sending the command in preparation for reception of the response from the slave.

To avoid collision of transmissions between the master and the slave, send the next command after carefully checking that the master has received the response.

If a response to the command is not returned due to communication errors, set the Retry Processing to send the command again. (It is recommended to execute Retry twice or more.)

Slave Side

When the slave starts transmission through the RS-485 communication line, the slave is arranged so as to provide an idle status (mark status) transmission period of 1 or more characters before sending the response to ensure synchronization on the receiving side.

The slave is arranged so as to disconnect the transmitter from the communication line within a 1-character transmission period after sending the response.

11.4 Shinko Protocol

11.4.1 Transmission Mode

Shinko protocol is composed of ASCII.
Hexadecimal (0 to 9, A to F), which is divided into high order (4-bit) and low order (4-bit) out of 8-bit binary data in command is transmitted as ASCII characters.

Data format Start bit: 1 bit
Data bit: 7 bits
Parity: Even
Stop bit: 1 bit

Error detection: Checksum

11.4.2 Command Configuration

All commands are composed of ASCII.
The data (set value, decimal number) is represented by hexadecimal numbers.
The negative numbers are represented in 2's complement.
Numerals written below the command represent number of characters.

(1) Setting Command

Header (02H)	Address	Sub address (20H)	Command type (50H)	Data item	Data	Checksum	Delimiter (03H)
1	1	1	1	4	4	2	1

(Fig. 11.4.2-1)

(2) Reading Command

Header (02H)	Address	Sub address (20H)	Command type (20H)	Data item	Checksum	Delimiter (03H)
1	1	1	1	4	2	1

(Fig. 11.4.2-2)

(3) Response with Data

Header (06H)	Address	Sub address (20H)	Command type (20H)	Data item	Data	Checksum	Delimiter (03H)
1	1	1	1	4	4	2	1

(Fig. 11.4.2-3)

(4) Acknowledgement

Header (06H)	Address	Checksum	Delimiter (03H)
1	1	2	1

(Fig. 11.4.2-4)

(5) Negative Acknowledgement

Header (15H)	Address	Error code	Checksum	Delimiter (03H)
1	1	1	2	1

(Fig. 11.4.2-5)

Header: Control code to represent the beginning of the command or the response.
ASCII codes are used.
Setting command, Reading command: STX (02H) fixed
Response with data, Acknowledgement: ACK (06H) fixed
Negative acknowledgement: NAK (15H) fixed

Instrument Number (Address): Numbers by which the master discerns each slave.
Instrument numbers 0 to 94 and Global address 95.
ASCII codes (20H to 7FH) are used by adding 20H to instrument numbers 0 to 95 (00H to 5FH).
95 (7FH) is called Global address, which is used when the same command is sent to all the slaves connected. However, the response is not returned.

Sub Address: 20H fixed

Command Type: Code to discern Setting command (50H) and Reading command (20H).

Data Item: Classification of the command object.
Composed of 4-digit hexadecimal numbers, using ASCII.
(Refer to “11.6. Communication Command Table”.) (pp.55 to 63)

Data: The contents of data (set value) differ depending on the setting command.
Composed of 4-digit hexadecimal numbers, using ASCII.
(Refer to “11.6. Communication Command Table”.) (pp.55 to 63)

Checksum: 2-character data to detect communication errors.
(Refer to “11.4.3 Checksum Calculation”.) (p.50)

Delimiter: Control code to represent the end of command.
ASCII code ETX (03H) fixed

Error Code: Represents an error type, using ASCII.
1 (31H)-----Non-existent command
2 (32H)-----Not used
3 (33H)-----Setting outside the setting range
4 (34H)-----Status unable to be set (e.g. During calibration mode)
5 (35H)-----During setting mode by keypad operation

11.4.3 Checksum Calculation

Checksum is used to detect receiving errors in the command or data.
Set the program for the master side as well to calculate the checksum of the response data from the slaves so that communication errors can be checked.

The ASCII code (hexadecimal) corresponding to the characters which range from the address to that before the checksum is converted to binary notation, and the total value is calculated.
The lower one byte of the total value is converted to 2’s complement, and then to hexadecimal numbers, that is, ASCII code for the checksum.

- 1’s complement: Reverse each binary bit. 0 will become 1 and vice versa.
- 2’s complement: Add 1 to 1’s complement.

Checksum Calculation Example

A11 value: 1.00 (0064H)
Address (instrument number) : 0 (20H)

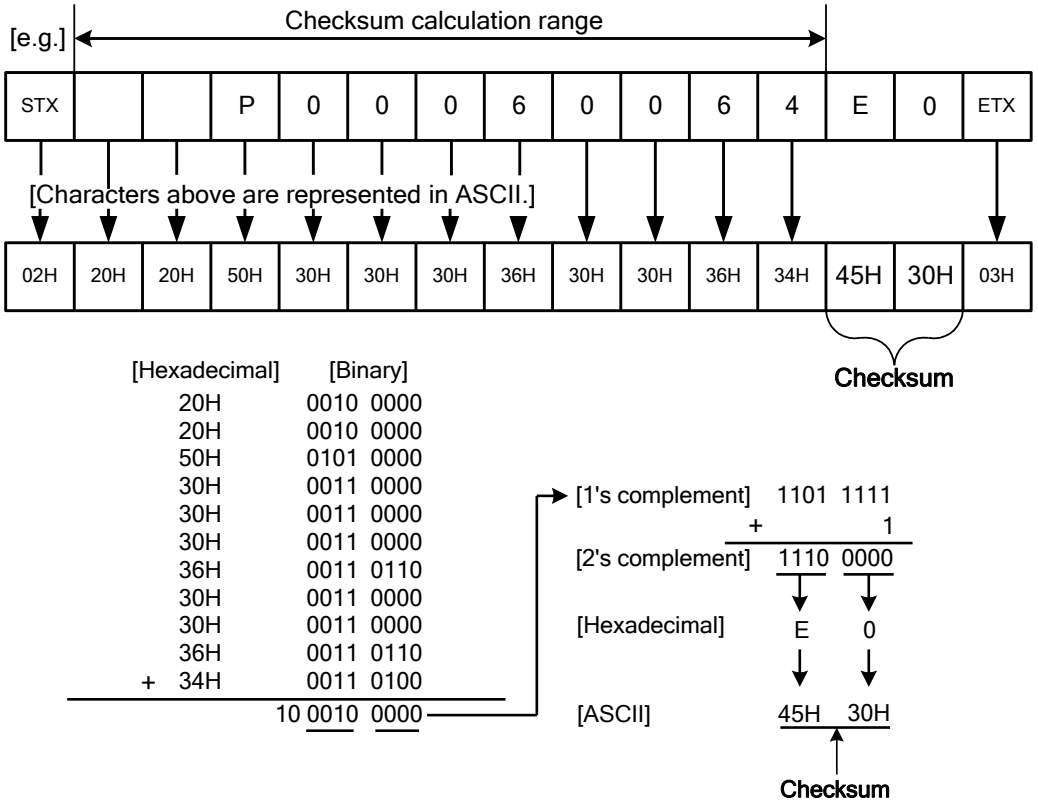

(Fig. 11.4.3-1)

11.5 MODBUS Protocol

11.5.1 Transmission Mode

There are 2 transmission modes (ASCII and RTU) in MODBUS protocol.

ASCII Mode

Hexadecimal (0 to 9, A to F), which is divided into high order (4-bit) and low order (4-bit) out of 8-bit binary data in command is transmitted as ASCII characters.

Data format Start bit: 1 bit
Data bit: 7 bits (8 bits) (Selectable)
Parity: Even (No parity, Odd) (Selectable)
Stop bit: 1 bit (2 bits) (Selectable)

Error detection : LRC (Longitudinal Redundancy Check)

RTU Mode

8-bit binary data in command is transmitted as it is.

Data format Start bit: 1 bit
Data bit: 8 bits
Parity: No parity (Even, Odd) (Selectable)
Stop bit: 1 bit (2 bits) (Selectable)

Error detection: CRC-16 (Cyclic Redundancy Check)

11.5.2 Data Communication Interval

ASCII Mode

Max.1 second of interval between ASCII mode characters

RTU Mode

Communication speed 9600 bps, 19200 bps:
To transmit continuously, an interval between characters which consist of one message, must be within 1.5-character transmission times.

Communication speed 38400 bps:
To transmit continuously, an interval between characters which consist of one message, must be within 750 μs.

If an interval lasts longer than 1.5-character transmission times or 750 μs, the WIL-102-ECL assumes that transmission from the master is finished, which results in a communication error, and will not return a response.

11.5.3 Message Configuration

ASCII Mode

ASCII mode message is configured to start by Header [: (colon)(3AH)] and end by Delimiter [CR (carriage return) (0DH) + LF (Line feed)(0AH)].

Header (:)	Slave Address	Function Code	Data	Error Check LRC	Delimiter (CR)	Delimiter (LF)

RTU Mode

Communication speed 9600 bps, 19200 bps: RTU mode is configured to start after idle time is processed for more than 3.5-character transmissions, and end after idle time is processed for more than 3.5-character transmissions.

Communication speed 38400 bps: RTU mode is configured to start after idle time is processed for more than 1.75 ms, and end after idle time is processed for more than 1.75 ms.

3.5 Idle Characters	Slave Address	Function Code	Data	Error Check CRC-16	3.5 Idle Characters

(1) Slave Address

Slave address is an individual instrument number on the slave side, and is set within the range 0 to 95 (00H to 5FH).

The master identifies slaves by the slave address of the requested message.

The slave informs the master which slave is responding to the master by placing its own address in the response message.
Slave address 00H (Broadcast address) can identify all the slaves connected. However, slaves do not respond.

(2) Function Code

The function code is the command code for the slave to undertake the following action types.

(Table 11.5.3-1)

Function Code	Contents
03 (03H)	Reading the set value and information from slaves
06 (06H)	Setting to slaves

Function code is used to discern whether the response is normal (acknowledgement) or if any error (negative acknowledgement) has occurred when the slave returns the response message to the master.
When acknowledgement is returned, the slave simply returns the original function code.
When negative acknowledgement is returned, the MSB of the original function code is set as 1 for the response.
(For example, when the master sends request message setting 10H to the function code by mistake, slave returns 90H by setting the MSB to 1, because the former is an illegal function.)

For negative acknowledgement, the exception codes below (Table 11.5.3-2) are set to the data of the response message, and returned to the master in order to inform it of what kind of error has occurred.

(Table 11.5.3-2)

Exception Code	Contents
1 (01H)	Illegal function (Non-existent function)
2 (02H)	Illegal data address (Non-existent data address)
3 (03H)	Illegal data value (Value out of the setting range)
17 (11H)	Shinko protocol error code 4 [Status unable to be set (e.g.) During calibration mode]
18 (12H)	Shinko protocol error code 5 (During setting mode by keypad operation)

(3) Data

Data differs depending on the function code.
A request message from the master is composed of data item, amount of data and setting data.
A response message from the slave is composed of the byte count, data and exception codes in negative acknowledgements, corresponding to the request message.
Effective range of data is -32768 to 32767 (8000H to 7FFFH).

(4) Error Check

ASCII Mode

After calculating LRC (Longitudinal Redundancy Check) from the slave address to the end of data, the calculated 8-bit data is converted to two ASCII characters, and are appended to the end of message.

How to Calculate LRC

① Create a message in RTU mode.
② Add all the values from the slave address to the end of data. This is assumed as X.
③ Make a complement for X (bit reverse). This is assumed as X.
④ Add a value of 1 to X. This is assumed as X.
⑤ Set X as an LRC to the end of the message.
⑥ Convert the whole message to ASCII characters.

RTU Mode

After calculating CRC-16 (Cyclic Redundancy Check) from the slave address to the end of the data, the calculated 16-bit data is appended to the end of message in sequence from low order to high order.

How to calculate CRC-16

In the CRC-16 system, the information is divided by the polynomial series. The remainder is added to the end of the information and transmitted. The generation of a polynomial series is as follows. (Generation of polynomial series: $X^{16} + X^{15} + X^{2} + 1$)

① Initialize the CRC-16 data (assumed as X) (FFFFH).
② Calculate exclusive OR (XOR) with the 1st data and X. This is assumed as X.
③ Shift X one bit to the right. This is assumed as X.
④ When a carry is generated as a result of the shift, XOR is calculated by X of ③ and the fixed value (A001H). This is assumed as X. If a carry is not generated, go to step ⑤.
⑤ Repeat steps ③ and ④ until shifting 8 times.
⑥ XOR is calculated with the next data and X. This is assumed as X.
⑦ Repeat steps ③ to ⑤.
⑧ Repeat steps ③ to ⑤ up to the final data.
⑨ Set X as CRC-16 to the end of message in sequence from low order to high order.

11.5.4 Message Example

ASCII Mode

Numerals written below the command represent the number of characters.

① **Reading [Slave address 1, Data item 0080H (Conductivity)]**

• A request message from the master

Amount of data means how many data items are to be read. It is fixed as (30H 30H 30H 31H).

Header	Slave Address	Function Code	Data Item [0080H]	Amount of Data [0001H]	Error Check LRC	Delimiter
(3AH)	(30H 31H)	(30H 33H)	(30H 30H 38H 30H)	(30H 30H 30H 31H)	(37H 42H)	(0DH 0AH)
1	2	2	4	4	2	2

• Response message from the slave in normal status [1.00 μS/cm (0064H)]

The response byte count means the byte count of the data which has been read. It is fixed as (30H 32H).

Header	Slave Address	Function Code	Response Byte Count [02H]	Data [0064H]	Error Check LRC	Delimiter
(3AH)	(30H 31H)	(30H 33H)	(30H 32H)	(30H 30H 36H 34H)	(39H 36H)	(0DH 0AH)
1	2	2	2	4	2	2

• Response message from the slave in exception (error) status (When a data item is incorrect)

The function code MSB is set to 1 for the response message in exception (error) status (83H). The exception code 02H (Non-existent data address) is returned (error).

Header	Slave Address	Function Code	Exception Code [02H]	Error Check LRC	Delimiter
(3AH)	(30H 31H)	(38H 33H)	(30H 32H)	(37H 41H)	(0DH 0AH)
1	2	2	2	2	2

② **Setting [Slave address 1, Data item 0006H (A11 value)]**

• A request message from the master [When A11 value is set to 1.00 (0064H)]

Header	Slave Address	Function Code	Data Item [0006H]	Data [0064H]	Error Check LRC	Delimiter
(3AH)	(30H 31H)	(30H 36H)	(30H 30H 30H 36H)	(30H 30H 36H 34H)	(38H 44H)	(0DH 0AH)
1	2	2	4	4	2	2

• Response message from the slave in normal status

Header	Slave Address	Function Code	Data Item [0006H]	Data [0064H]	Error Check LRC	Delimiter
(3AH)	(30H 31H)	(30H 36H)	(30H 30H 30H 36H)	(30H 30H 36H 34H)	(38H 44H)	(0DH 0AH)
1	2	2	4	4	2	2

• Response message from the slave in exception (error) status (When a value out of the setting range is set)

The function code MSB is set to 1 for the response message in exception (error) status (86H).
The exception code 03H (Value out of the setting range) is returned (error).

Header	Slave Address	Function Code	Exception Code [03H]	Error Check LRC	Delimiter
(3AH)	(30H 31H)	(38H 36H)	(30H 33H)	(37H 36H)	(0DH 0AH)
1	2	2	2	2	2

RTU Mode

Numerals written below the command represent the number of characters.

① **Reading [Slave address 1, Data item 0080H (Conductivity)]**

• A request message from the master

Amount of data means how many data items are to be read. It is fixed as (0001H).

3.5 Idle Characters	Slave Address	Function Code	Data Item	Amount of Data	Error Check CRC-16	3.5 Idle Characters
	(01H)	(03H)	(0080H)	(0001H)	(85E2H)	
	1	1	2	2	2	

• Response message from the slave in normal status [1.00 μS/cm (0064H)]

The response byte count means the byte count of the data which has been read.
It is fixed as (02H).

3.5 Idle Characters	Slave Address	Function Code	Response Byte Count	Data	Error Check CRC-16	3.5 Idle Characters
	(01H)	(03H)	(02H)	(0064H)	(B9AFH)	
	1	1	1	2	2	

• Response message from the slave in exception (error) status (When data item is incorrect).

The function code MSB is set to 1 for the response message in exception (error) status (83H).
The exception code (02H: Non-existent data address) is returned (error).

3.5 Idle Characters	Slave Address	Function Code	Exception Code	Error Check CRC-16	3.5 Idle Characters
	(01H)	(83H)	(02H)	(C0F1H)	
	1	1	1	2	

② **Setting [Slave address 1, Data item 0006H (A11 value)]**

• A request message from the master [When A11 value is set to 1.00 (0064H)]

3.5 Idle Characters	Slave Address	Function Code	Data Item	Data	Error Check CRC-16	3.5 Idle Characters
	(01H)	(06H)	(0006H)	(0064H)	(6820H)	
	1	1	2	2	2	

• Response message from the slave in normal status

3.5 Idle Characters	Slave Address	Function Code	Data Item	Data	Error Check CRC-16	3.5 Idle Characters
	(01H)	(06H)	(0006H)	(0064H)	(6820H)	
	1	1	2	2	2	

• Response message from the slave in exception (error) status (When a value out of the setting range is set)

The function code MSB is set to 1 for the response message in exception (error) status (86H).
The exception code (03H: Value out of the setting range) is returned (error).

3.5 Idle Characters	Slave Address	Function Code	Exception Code	Error Check CRC-16	3.5 Idle Characters
	(01H)	(86H)	(03H)	(0261H)	
	1	1	1	2	

11.6 Communication Command Table

11.6.1 Notes about Setting/Reading Command

- The data (set value, decimal) is converted to hexadecimal numbers.
  A negative number is represented in 2's complement.
- When connecting multiple slaves, the address (instrument number) must not be duplicated.
- Data item 0200H to 0209H (User save area 1 to 10) can be read or set in 1 word units.
  Effective range of data is -32768 to 32767 (8000H to 7FFFH).
- MODBUS protocol uses Holding Register addresses. The Holding Register addresses are created as follows. A Shinko command data item is converted to decimal number, and the offset of 40001 is added. The result is the Holding Register address.
  Using Data item 0005H (A11 type) as an example:
  Data item in the sending message is 0005H, however, MODBUS protocol Holding Register address is 40006 (5 + 40001).
- Even if options are not ordered, setting or reading via software communication will be possible. Command contents of the A11, A12, A21, A22 will function, however, Transmission output 1 and 2 command contents will not function.

(1) Setting Command

- Up to 1,000,000 (one million) entries can be stored in non-volatile IC memory.
  If the number of settings exceeds the limit, the data will not be saved. So, ensure the set values are not frequently changed via software communication. (If a value set via software communication is the same as the value before the setting, the value will not be written in non-volatile IC memory.)
- Be sure to select Lock 3 when changing the set value frequently via software communication.
  If Lock 3 is selected, all set values – except Sensor cell constant, Measurement unit, Measurement range, Conductivity Zero and Span adjustment values, Temperature calibration value, Transmission output 1 Zero and Span adjustment values, Transmission output 2 Zero and Span adjustment values – can be temporarily changed. However, they revert to their previous value after the power is turned off because they are not saved in the non-volatile IC memory.
  Do not change setting items (A11, A12, A21 and A22 types). If they are changed, they will affect other setting items.
- Setting range of each item is the same as that of keypad operation.
- When the data (set value) has a decimal point, a whole number (hexadecimal) without a decimal point is used.
- If A11, A12, A21 or A22 type is changed at Data item 0005H (A11 type), 0050H (A12 type), 0051H (A21 type) or 052H (A22 type), the A11, A12, A21 or A22 value will default to 0.00 or 0.0.
  The output status of A11, A12, A21 or A22 will also be initialized.
- Settings via software communication are possible while in Set value lock status.
- Communication parameters such as Instrument Number, Communication Speed of the slave cannot be set by software communication. They can only be set via the keypad. (p.47)
- When sending a command by Global address [95 (7FH), Shinko protocol] or Broadcast address [00H, MODBUS protocol], the same command is sent to all the slaves connected. However, the response is not returned.

(2) Reading Command

- When the data (set value) has a decimal point, a whole number (hexadecimal) without a decimal point is used for a response.

11.6.2 Setting/Reading Command

Shinko Command Type	MODBUS Function Code	Data Item		Data
50H/20H	06H/03H	0001H	Sensor cell constant	0000H: 0.01/cm 0001H: 0.1/cm 0002H: 1.0/cm
50H/20H	06H/03H	0002H	Cell constant correction value	Set value
50H/20H	06H/03H	0003H	Measurement unit	0000H: Conductivity (μS/cm) 0001H: Conductivity (mS/m) 0002H: TDS conversion (mg/L)
50H/20H	06H/03H	0004H	Measurement range	When Conductivity (μS/cm) is selected in [Measurement unit]: Cell constant 0.01/cm 0000H: 0.000 to 2.000 μS/cm 0001H: 0.00 to 20.00 μS/cm 0002H: 0.0 to 50.0 μS/cm Cell constant 0.1/cm 0000H: 0.00 to 20.00 μS/cm 0001H: 0.00 to 50.00 μS/cm 0002H: 0.0 to 500.0 μS/cm Cell constant 1.0/cm 0000H: 0.0 to 200.0 μS/cm When Conductivity (mS/m) is selected in [Measurement unit]: Cell constant 0.01/cm 0000H: 0.000 to 0.200 mS/m 0001H: 0.000 to 2.000 mS/m 0002H: 0.000 to 5.000 mS/m Cell constant 0.1/cm 0000H: 0.000 to 2.000 mS/m 0001H: 0.000 to 5.000 mS/m 0002H: 0.00 to 50.00 mS/m Cell constant 1.0/cm 0000H: 0.00 to 20.00 mS/m When TDS conversion (mg/L) is selected in [Measurement unit]: Cell constant 0.01/cm 0000H: 0.00 to 2.00 mg/L 0001H: 0.0 to 20.0 mg/L 0002H: 0.0 to 50.0 mg/L Cell constant 0.1/cm 0000H: 0.0 to 20.0 mg/L 0001H: 0 to 200 mg/L 0002H: 0 to 500 mg/L Cell constant 1.0/cm 0000H: 0 to 200 mg/L
50H/20H	06H/03H	0005H	A11 type	0000H: No action 0001H: Conductivity input low limit action 0002H: Conductivity input high limit action 0003H: Temperature input low limit action 0004H: Temperature input high limit action 0005H: Error output 0006H: Fail output 0007H: Conductivity input High/Low limits independent action 0008H: Temperature input High/Low limits independent action
50H/20H	06H/03H	0006H	A11 value	Set value
50H/20H	06H/03H	0007H	A11 ON side	Set value
50H/20H	06H/03H	0008H	A11 ON delay time	Set value
50H/20H	06H/03H	0009H	A11 OFF delay time	Set value

<table>
<tr><th>Shinko Command Type</th><th>MODBUS Function Code</th><th colspan="2">Data Item</th><th>Data</th></tr>
<tr><td>50H/20H</td><td>06H/03H</td><td>000AH</td><td>Conductivity input filter time constant</td><td>Set value</td></tr>
<tr><td>50H/20H</td><td>06H/03H</td><td>000BH</td><td>TDS conversion factor</td><td>Set value</td></tr>
<tr><td>50H/20H</td><td>06H/03H</td><td>0020H</td><td>Temperature compensation method</td><td>0000H: Temperature characteristics of NaCl
0001H: Temperature coefficient (%/℃) and a randomly selected reference temperature.
0002H: Temperature characteristics of deionized water
0003H: No temperature compensation</td></tr>
<tr><td>50H/20H</td><td>06H/03H</td><td>0021H</td><td>Temperature coefficient</td><td>Set value</td></tr>
<tr><td>50H/20H</td><td>06H/03H</td><td>0022H</td><td>Reference temperature</td><td>Set value</td></tr>
<tr><td>50H/20H</td><td>06H/03H</td><td>0023H</td><td>Temperature input decimal point place</td><td>0000H: No decimal point
0001H: 1 digit after decimal point</td></tr>
<tr><td>50H/20H</td><td>06H/03H</td><td>0029H</td><td>Temperature input filter time constant</td><td>Set value</td></tr>
<tr><td>50H/20H</td><td>06H/03H</td><td>0030H</td><td>Set value lock</td><td>0000H: Unlock
0001H: Lock 1
0002H: Lock 2
0003H: Lock 3</td></tr>
<tr><td>50H/20H</td><td>06H/03H</td><td>0031H</td><td>Transmission output 1 type</td><td>0000H: Conductivity transmission
0001H: Temperature transmission</td></tr>
<tr><td>50H/20H</td><td>06H/03H</td><td>0032H</td><td>Transmission output 1 high limit</td><td>Set value</td></tr>
<tr><td>50H/20H</td><td>06H/03H</td><td>0033H</td><td>Transmission output 1 low limit</td><td>Set value</td></tr>
<tr><td>50H/20H</td><td>06H/03H</td><td>0034H</td><td>Auto-light function</td><td>0000H: Disabled
0001H: Enabled</td></tr>
<tr><td>50H/20H</td><td>06H/03H</td><td>0035H</td><td>Display selection</td><td><table><tr><th>Data</th><th>Conductivity Display</th><th>Temperature Display</th></tr><tr><td>0000H</td><td>Conductivity</td><td>Temperature</td></tr><tr><td>0001H</td><td>Conductivity</td><td>No indication</td></tr><tr><td>0002H</td><td>No indication</td><td>Temperature</td></tr><tr><td>0003H</td><td>No indication</td><td>No indication</td></tr></table></td></tr>
<tr><td>50H/20H</td><td>06H/03H</td><td>0036H</td><td>Indication time</td><td>Set value</td></tr>
<tr><td>50H</td><td>06H</td><td>0040H</td><td>Temperature calibration mode</td><td>0000H: Conductivity/Temperature Display Mode
0001H: Temperature calibration mode</td></tr>
<tr><td>50H/20H</td><td>06H/03H</td><td>0041H</td><td>Temperature calibration value</td><td>Set value</td></tr>
<tr><td>50H</td><td>06H</td><td>0042H</td><td>Conductivity calibration mode</td><td>0000H: Conductivity/Temperature Display Mode
0001H: Conductivity calibration Zero adjustment mode
0002H: Conductivity calibration Span adjustment mode</td></tr>
<tr><td>50H/20H</td><td>06H/03H</td><td>0043H</td><td>Conductivity Zero adjustment value</td><td>Set value</td></tr>
<tr><td>50H/20H</td><td>06H/03H</td><td>0044H</td><td>Conductivity Span adjustment value</td><td>Set value</td></tr>
<tr><td>50H/20H</td><td>06H/03H</td><td>0045H</td><td>A□□ output when input errors occur</td><td>0000H: Enabled
0001H: Disabled</td></tr>
<tr><td>50H/20H</td><td>06H/03H</td><td>0046H</td><td>Cable length correction</td><td>Set value</td></tr>
<tr><td>50H/20H</td><td>06H/03H</td><td>0047H</td><td>Cable cross-section area</td><td>Set value</td></tr>
<tr><td>50H/20H</td><td>06H/03H</td><td>0048H</td><td>Output ON time when A1 output is ON</td><td>Set value</td></tr>
<tr><td>50H/20H</td><td>06H/03H</td><td>0049H</td><td>Output OFF time when A1 output is ON</td><td>Set value</td></tr>
</table>

Shinko Command Type	MODBUS Function Code	Data Item		Data
50H/20H	06H/03H	004AH	Output ON time when A2 output is ON	Set value
50H/20H	06H/03H	004BH	Output OFF time when A2 output is ON	Set value
50H/20H	06H/03H	0050H	A12 type	0000H: No action 0001H: Conductivity input low limit action 0002H: Conductivity input high limit action 0003H: Temperature input low limit action 0004H: Temperature input high limit action 0005H: Error output 0006H: Fail output 0007H: Conductivity input High/Low limits independent action 0008H: Temperature input High/Low limits independent action
50H/20H	06H/03H	0051H	A21 type	0000H: No action 0001H: Conductivity input low limit action 0002H: Conductivity input high limit action 0003H: Temperature input low limit action 0004H: Temperature input high limit action 0005H: Error output 0006H: Fail output 0007H: Conductivity input High/Low limits independent action 0008H: Temperature input High/Low limits independent action
50H/20H	06H/03H	0052H	A22 type	0000H: No action 0001H: Conductivity input low limit action 0002H: Conductivity input high limit action 0003H: Temperature input low limit action 0004H: Temperature input high limit action 0005H: Error output 0006H: Fail output 0007H: Conductivity input High/Low limits independent action 0008H: Temperature input High/Low limits independent action
50H/20H	06H/03H	0053H	A12 value	Set value
50H/20H	06H/03H	0054H	A21 value	Set value
50H/20H	06H/03H	0055H	A22 value	Set value
50H/20H	06H/03H	0056H	A12 ON side	Set value
50H/20H	06H/03H	0057H	A21 ON side	Set value
50H/20H	06H/03H	0058H	A22 ON side	Set value
50H/20H	06H/03H	0059H	A12 ON delay time	Set value
50H/20H	06H/03H	005AH	A21 ON delay time	Set value
50H/20H	06H/03H	005BH	A22 ON delay time	Set value
50H/20H	06H/03H	005CH	A12 OFF delay time	Set value
50H/20H	06H/03H	005DH	A21 OFF delay time	Set value
50H/20H	06H/03H	005EH	A22 OFF delay time	Set value
50H/20H	06H/03H	0068H	Conductivity input sensor correction	Set value
50H/20H	06H/03H	0069H	Temperature Display when no temperature compensation	0000H: Unlit 0001H: Reference temperature 0002H: Measured value

Shinko Command Type	MODBUS Function Code	Data Item		Data
50H/20H	06H/03H	006AH	A1 output allocation	0000H: A11 type 0001H: A12 type 0002H: A21 type 0003H: A22 type 0004H: A11, A12 types 0005H: A21, A22 types 0006H: A11, A21 types 0007H: A12, A22 types 0008H: A11, A12, A21, A22 types
50H/20H	06H/03H	006BH	A2 output allocation	0000H: A11 type 0001H: A12 type 0002H: A21 type 0003H: A22 type 0004H: A11, A12 types 0005H: A21, A22 types 0006H: A11, A21 types 0007H: A12, A22 types 0008H: A11, A12, A21, A22 types
50H/20H	06H/03H	006FH	Pt100 input wire type	0000H: 2-wire type 0001H: 3-wire type
50H	06H	007FH	Key operation change flag clearing	0001H: Clear change flag
50H/20H	06H/03H	0100H	A11 hysteresis type	0000H: Medium Value 0001H: Reference Value
50H/20H	06H/03H	0101H	A12 hysteresis type	0000H: Medium Value 0001H: Reference Value
50H/20H	06H/03H	0102H	A21 hysteresis type	0000H: Medium Value 0001H: Reference Value
50H/20H	06H/03H	0103H	A22 hysteresis type	0000H: Medium Value 0001H: Reference Value
50H/20H	06H/03H	0104H	A11 OFF side	Set value
50H/20H	06H/03H	0105H	A12 OFF side	Set value
50H/20H	06H/03H	0106H	A21 OFF side	Set value
50H/20H	06H/03H	0107H	A22 OFF side	Set value
50H/20H	06H/03H	010FH	Transmission output 1 status when calibrating	0000H: Last value HOLD 0001H: Set value HOLD 0002H: Measured value
50H/20H	06H/03H	0110H	Transmission output 1 value HOLD when calibrating	Set value
50H/20H	06H/03H	0111H	A1 conductivity input error alarm A□□ type	0000H: No action 0001H: A11 type 0002H: A12 type 0003H: A21 type 0004H: A22 type
50H/20H	06H/03H	0112H	A2 conductivity input error alarm A□□ type	0000H: No action 0001H: A11 type 0002H: A12 type 0003H: A21 type 0004H: A22 type
50H/20H	06H/03H	0115H	A1 conductivity input error alarm band when A□□ output ON	Set value
50H/20H	06H/03H	0116H	A1 conductivity input error alarm time when A□□ output ON	Set value

Shinko Command Type	MODBUS Function Code	Data Item		Data
50H/20H	06H/03H	0117H	A1 conductivity input error alarm band when A□□ output OFF	Set value
50H/20H	06H/03H	0118H	A1 conductivity input error alarm time when A□□ output OFF	Set value
50H/20H	06H/03H	0119H	A2 conductivity input error alarm band when A□□ output ON	Set value
50H/20H	06H/03H	011AH	A2 conductivity input error alarm time when A□□ output ON	Set value
50H/20H	06H/03H	011BH	A2 conductivity input error alarm band when A□□ output OFF	Set value
50H/20H	06H/03H	011CH	A2 conductivity input error alarm time when A□□ output OFF	Set value
50H/20H	06H/03H	0125H	Conductivity input error alarm time unit	0000H: Second(s) 0001H: Minute(s)
50H	06H	0126H	Transmission output 1 adjustment mode	0000H: Conductivity/Temperature Display Mode 0001H: Transmission output 1 Zero adjustment mode 0002H: Transmission output 1 Span adjustment mode
50H/20H	06H/03H	0127H	Transmission output 1 Zero adjustment value	Set value
50H/20H	06H/03H	0128H	Transmission output 1 Span adjustment value	Set value
50H/20H	06H/03H	0131H	3-electrode Conductivity Sensor resistance	Set value
50H/20H	06H/03H	0139H	A11 High/Low limits independent lower side span	Set value
50H/20H	06H/03H	013AH	A12 High/Low limits independent lower side span	Set value
50H/20H	06H/03H	013BH	A21 High/Low limits independent lower side span	Set value
50H/20H	06H/03H	013CH	A22 High/Low limits independent lower side span	Set value
50H/20H	06H/03H	013DH	A11 High/Low limits independent upper side span	Set value
50H/20H	06H/03H	013EH	A12 High/Low limits independent upper side span	Set value
50H/20H	06H/03H	013FH	A21 High/Low limits independent upper side span	Set value
50H/20H	06H/03H	0140H	A22 High/Low limits independent upper side span	Set value
50H/20H	06H/03H	0141H	A11 hysteresis	Set value
50H/20H	06H/03H	0142H	A12 hysteresis	Set value
50H/20H	06H/03H	0143H	A21 hysteresis	Set value
50H/20H	06H/03H	0144H	A22 hysteresis	Set value
50H/20H	06H/03H	0147H	Transmission output 2 type	0000H: Conductivity transmission 0001H: Temperature transmission
50H/20H	06H/03H	0148H	Transmission output 2 high limit	Set value
50H/20H	06H/03H	0149H	Transmission output 2 low limit	Set value

Shinko Command Type	MODBUS Function Code	Data Item		Data
50H	06H	014AH	Transmission output 2 adjustment mode (*)	0000H: Conductivity/Temperature display mode 0001H: Transmission output 2 Zero adjustment mode 0002H: Transmission output 2 Span adjustment mode
50H / 20H	06H/03H	014BH	Transmission output 2 Zero adjustment value	Set value
50H / 20H	06H/03H	014CH	Transmission output 2 Span adjustment value	Set value
50H / 20H	06H/03H	014DH	Transmission output 2 status when calibrating	0000H: Last value HOLD 0001H: Set value HOLD 0002H: Measured value
50H / 20H	06H/03H	014EH	Transmission output 2 value HOLD when calibrating	Set value
50H / 20H	06H/03H	0151H	Conductivity inputs for moving average	Set value
50H / 20H	06H/03H	0152H	Temperature inputs for moving average	Set value
50H / 20H	06H/03H	0200H	User save area 1	-32768 to 32767 (8000H to 7FFFH)
50H / 20H	06H/03H	0201H	User save area 2	-32768 to 32767 (8000H to 7FFFH)
50H / 20H	06H/03H	0202H	User save area 3	-32768 to 32767 (8000H to 7FFFH)
50H / 20H	06H/03H	0203H	User save area 4	-32768 to 32767 (8000H to 7FFFH)
50H / 20H	06H/03H	0204H	User save area 5	-32768 to 32767 (8000H to 7FFFH)
50H / 20H	06H/03H	0205H	User save area 6	-32768 to 32767 (8000H to 7FFFH)
50H / 20H	06H/03H	0206H	User save area 7	-32768 to 32767 (8000H to 7FFFH)
50H / 20H	06H/03H	0207H	User save area 8	-32768 to 32767 (8000H to 7FFFH)
50H / 20H	06H/03H	0208H	User save area 9	-32768 to 32767 (8000H to 7FFFH)
50H / 20H	06H/03H	0209H	User save area 10	-32768 to 32767 (8000H to 7FFFH)

(*) If 'Setting' is executed while Transmission output 2 (TA2 option) is not ordered, the following error code will be returned.

- Shinko protocol: Error code 4 (34H)
- Modbus: Exception code 17 (11H)

11.6.3 Read Only Command

<table>
<tr><th>Shinko Command Type</th><th>MODBUS Function Code</th><th colspan="2">Data Item</th><th>Data</th></tr>
<tr><td>20H</td><td>03H</td><td>0080H</td><td>Conductivity</td><td>Conductivity</td></tr>
<tr><td>20H</td><td>03H</td><td>0081H</td><td colspan="2">Status flag 1
0000 0000 0000 0000
2^{15} to 2^{0}
2^{0} digit: Temperature sensor burnout 0: Normal 1: Burnout
2^{1} digit: Temperature sensor short-circuited 0: Normal 1: Short-circuited
2^{2} digit: Outside temperature compensation range: Exceeding 110.0℃
0: Normal 1: Exceeding 110.0℃
2^{3} digit: Outside temperature compensation range: Less than 0.0℃
0: Normal 1: Less than 0.0℃
2^{4} digit: Outside measurement range of conductivity measured value and TDS conversion (high limit)
0: Normal 1: Outside high limit
2^{5} digit: Outside measurement range of conductivity measured value and TDS conversion (low limit)
0: Normal 1: Outside low limit
2^{6} digit: A11 output flag 0: OFF 1: ON
2^{7} digit: A12 output flag 0: OFF 1: ON
2^{8} digit: A21 output flag 0: OFF 1: ON
2^{9} digit: A22 output flag 0: OFF 1: ON
2^{10} digit: Not used (Always 0)
2^{11} digit: Unit status flag 0: Conductivity/Temperature Display Mode
1: Setting mode
2^{12}, 2^{13} digits: Conductivity calibration status flag
<table>
<tr><th>2^{13}</th><th>2^{12}</th><th>Status</th></tr>
<tr><td>0</td><td>0</td><td>Conductivity/Temperature Display Mode</td></tr>
<tr><td>0</td><td>1</td><td>During Conductivity calibration Zero adjustment mode</td></tr>
<tr><td>1</td><td>0</td><td>During Conductivity calibration Span adjustment mode</td></tr>
</table>
2^{14} digit: A1 output 0: OFF 1: ON
2^{15} digit: Change in key operation 0: No 1: Yes</td></tr>
<tr><td>20H</td><td>03H</td><td>0090H</td><td>Temperature</td><td>Temperature</td></tr>
</table>

<table>
<tr><th>Shinko Command Type</th><th>MODBUS Function Code</th><th colspan="2">Data Item</th><th>Data</th></tr>
<tr><td>20H</td><td>03H</td><td>0091H</td><td colspan="2">Status flag 2
0000 0000 0000 0000
2^{15} to 2^{0}
2^{0} digit: Not used (Always 0)
2^{1} digit: A2 output 0: OFF 1: ON
2^{2}, 2^{3} digits: Not used (Always 0)
2^{4}, 2^{5} digits: Transmission output 1 adjustment status flag
<table>
<tr><th>2^{5}</th><th>2^{4}</th><th>Status</th></tr>
<tr><td>0</td><td>0</td><td>Conductivity/Temperature Display Mode</td></tr>
<tr><td>0</td><td>1</td><td>During Transmission output 1 Zero adjustment in Transmission output 1 adjustment mode</td></tr>
<tr><td>1</td><td>0</td><td>During Transmission output 1 Span adjustment in Transmission output 1 adjustment mode</td></tr>
</table>
2^{6} digit: A1 conductivity input error alarm output flag
0: OFF 1: ON
2^{7} digit: A2 conductivity input error alarm output flag
0: OFF 1: ON
2^{8}, 2^{9} digits: Transmission output 2 adjustment status flag
<table>
<tr><th>2^{9}</th><th>2^{8}</th><th>Status</th></tr>
<tr><td>0</td><td>0</td><td>Conductivity/Temperature Display Mode</td></tr>
<tr><td>0</td><td>1</td><td>During Transmission output 2 Zero adjustment in Transmission output 2 adjustment mode</td></tr>
<tr><td>1</td><td>0</td><td>During Transmission output 2 Span adjustment in Transmission output 2 adjustment mode</td></tr>
</table>
2^{10}, 2^{11} digits: Not used (Always 0)
2^{12}, 2^{13} digits: Temperature calibration status flag
<table>
<tr><th>2^{13}</th><th>2^{12}</th><th>Status</th></tr>
<tr><td>0</td><td>0</td><td>Conductivity/Temperature Display Mode</td></tr>
<tr><td>0</td><td>1</td><td>During temperature calibration</td></tr>
</table>
2^{14}, 2^{15} digits: Not used (Always 0)</td></tr>
</table>

11.7 Conductivity & Temperature Calibrations, Transmission Output 1 & 2 Adjustments via Communication Command

11.7.1 Conductivity Calibration

Cell constant may vary due to deterioration of the 2-electrode Conductivity Sensor.
To correct the varied cell constant, calibration must be performed.
Calibrate Conductivity Zero adjustment first, followed by Conductivity Span adjustment.

The following outlines the procedure for conductivity calibration.

(1) Conductivity Zero adjustment

① When selecting Last value HOLD (0000H) at Data item 010FH (Transmission output 1 status when calibrating) or 014DH (Transmission output 2 status when calibrating), select it while the 2-elctrode Conductivity Sensor is being immersed in the solution currently measured.
② At this stage, do not immerse the 2-elctrode Conductivity Sensor in the standard solution.
③ Set Data item 0042H (Conductivity calibration mode) to 0001H.
The unit moves to Conductivity calibration Zero adjustment mode.
If 2^{13}, 2^{12} digits are read at Data item 0081H (Status flag 1), 01 (During Conductivity calibration Zero adjustment mode) will be returned.
④ Set the Conductivity Zero adjustment value at Data item 0043H (Conductivity Zero adjustment value) so that conductivity becomes 0 (zero).
When conductivity is 0 (zero), it is not necessary to adjust.
⑤ Set Data item 0042H (Conductivity calibration mode) to 0000H.
Conductivity Zero adjustment is complete, and the unit will revert to Conductivity/Temperature Display Mode.

(2) Conductivity Span adjustment

① Immerse the 2-elctrode Conductivity Sensor in the standard solution.
② Set Data item 0042H (Conductivity calibration mode) to 0002H.
The unit moves to Conductivity calibration Span adjustment mode.
If 2^{13}, 2^{12} digits are read at Data item 0081H (Status flag 1), 10 (During Conductivity calibration Span adjustment mode) will be returned.
③ Set the Conductivity Span adjustment value at Data item 0044H (Conductivity Span adjustment value), while checking the conductivity.
④ Set Data item 0042H (Conductivity calibration mode) to 0000H.
Conductivity Span adjustment is complete, and the unit will revert to Conductivity/Temperature Display Mode.

If Conductivity calibration cannot be performed while calibrating conductivity due to temperature compensation error, Conductivity measurement value error, etc., Error code 1 (Burnout, Short-circuited, etc.) will be returned after 2^0 to 2^5 digits are read at Data item 0081H (Status flag 1).
To cancel the error code, set Data item 0042H (Conductivity calibration mode) to 0000H.
The unit will revert to Conductivity/Temperature Display Mode.

If Conductivity Zero/Span adjustment value is set at Data item 0043H (Conductivity Zero adjustment value) or 0044H (Conductivity Span adjustment value) in Conductivity/Temperature Display Mode, the following error code will be returned.

- Shinko protocol: Error code 34H
- MODBUS protocol: Exception code 11H

11.7.2 Temperature Calibration

Temperature calibration is performed by setting temperature calibration value.

The following outlines the procedure for Temperature calibration.

① Set Data item 0040H (Temperature calibration mode) to 0001H. The unit moves to Temperature calibration mode.
If 2^{13}, 2^{12} digits are read at Data item 0091H (Status Flag 2), 01 (During temperature calibration) will be returned.

② Set the Temperature calibration value at Data item 0041H (Temperature calibration value), while checking the temperature.

③ Set Data item 0040H (Temperature calibration mode) to 0000H.
Temperature calibration is complete, and the unit will revert to Conductivity/Temperature Display Mode.

If Temperature calibration cannot be performed while calibrating temperature due to input error, calibration value error, etc., Error code 1 (Burnout, Short-circuited, etc.) will be returned after 2^0 to 2^5 digits are read at Data item 0081H.
To cancel the error code, set Data item 0040H (Temperature calibration mode) to 0000H.
The unit will revert to Conductivity/Temperature Display Mode.

If Temperature calibration value is set at Data item 0041H (Temperature calibration value) in Conductivity/Temperature Display Mode, the following error code will be returned.
Shinko protocol: Error code 34H
MODBUS protocol: Exception code 11H

11.7.3 Transmission Output 1 Adjustment

Fine adjustment of Transmission output 1 is performed.
This instrument is adjusted at the factory, however, differences may occur between the indication value of the connected equipment (recorders, etc.) and output value of this instrument.
In this case, perform Transmission output 1 Zero and Span adjustments.

The following outlines the procedure for Transmission output 1 adjustment.

① Set Data item 0126H (Transmission output 1 adjustment mode) to 0001H.
The unit moves to Transmission output 1 Zero adjustment mode.
If 2^5, 2^4 digits are read at Data item 0091H (Status flag 2), 01 (During Transmission output 1 Zero adjustment in Transmission output 1 adjustment mode) will be returned.

② Set the Transmission output 1 Zero adjustment value at Data item 0127H (Transmission output 1 Zero adjustment value), while viewing the value indicated on the connected equipment (recorders, etc.).
Setting range: ±5.00% of Transmission output 1 span

③ Set Data item 0126H (Transmission output 1 adjustment mode) to 0002H.
The unit moves to Transmission output 1 Span adjustment mode.
If 2^5, 2^4 digits are read at Data item 0091H (Status flag 2), 10 (During Transmission output 1 Span adjustment in Transmission output 1 adjustment mode) will be returned.

④ Set Transmission output 1 Span adjustment value at Data item 0128H (Transmission output 1 Span adjustment value), while viewing the value indicated on the connected equipment (recorders, etc.).
Setting range: ±5.00% of Transmission output 1 span

⑤ Repeat steps ① to ④ if necessary.

⑥ To finish Transmission output 1 adjustment, set Data item 0126H (Transmission output 1 adjustment mode) to 0000H.
The unit reverts to Conductivity/Temperature Display Mode.

11.7.4 Transmission Output 2 Adjustment

Fine adjustment of Transmission output 2 is performed.
This instrument is adjusted at the factory, however, differences may occur between the indication value of the connected equipment (recorders, etc.) and output value of this instrument.
In this case, perform Transmission output 2 Zero and Span adjustments.

The following outlines the procedure for Transmission output 2 adjustment.

① Set Data item 014AH (Transmission output 2 adjustment mode) to 0001H.
The unit moves to Transmission output 2 Zero adjustment mode.
If 2^9, 2^8 digits are read at Data item 0091H (Status flag 2), 01 (During Transmission output 2 Zero adjustment in Transmission output 2 adjustment mode) will be returned.

② Set the Transmission output 2 Zero adjustment value at Data item 014BH (Transmission output 2 Zero adjustment value), while viewing the value indicated on the connected equipment (recorders, etc.).
Setting range: ±5.00% of Transmission output 2 span

③ Set Data item 014AH (Transmission output 2 adjustment mode) to 0002H.
The unit moves to Transmission output 2 Span adjustment mode.
If 2^9, 2^8 digits are read at Data item 0091H (Status flag 2), 10 (During Transmission output 2 Span adjustment in Transmission output 2 adjustment mode) will be returned.

④ Set Transmission output 2 Span adjustment value at Data item 014CH (Transmission output 2 Span adjustment value), while viewing the value indicated on the connected equipment (recorders, etc.).
Setting range: ±5.00% of Transmission output 2 span

⑤ Repeat steps ① to ④ if necessary.

⑥ To finish Transmission output 2 adjustment, set Data item 014AH (Transmission output 2 adjustment mode) to 0000H.
The unit reverts to Conductivity/Temperature Display Mode.

11.8 Notes on Programming Monitoring Software

11.8.1 How to Speed up the Scan Time

When monitoring multiple units of the WIL-102-ECL, set the program so that the requisite minimum pieces of data such as Data item 0080H (Conductivity), Data item 0090H (Temperature), Data item 0081H (Status flag 1), Data item 0091H (Status flag 2) can be read.

For other data, set the program so that they can be read only when their set value has been changed. This will speed up the scan time.

11.8.2 How to Read the Set Value Changes Made by Front Keypad Operation

If any set value is changed by keypad operation, the instrument sets [0081H (Status flag 1) 2^{15}: Change in key operation] to 1 (Yes).

There are 2 methods of reading the set value changes made by the front keypad.

(1) Reading Method 1

① On the monitoring software side, check that [0081H (Status flag 1) 2^{15}: Change in key operation] has been set to 1 (Yes), then read all set values.

② Clear [0081H (Status flag 1) 2^{15}: Change in key operation], by setting Data item 007FH (Key operation change flag clearing) to 0001H (Clear change flag).

If 007FH (Key operation change flag clearing) is set to 0001H (Clear change flag) during the setting mode of the instrument, Error code 5 (35H, Shinko protocol) or Exception Code 18 (12H, MODBUS protocol) will be returned as a negative acknowledgement. And [0081H (Status flag 1) 2^{15}: Change in key operation] cannot be cleared.

Set a program so that all set values can be read when a negative acknowledgement is returned.

③ Read all set values again after acknowledgement is returned.

(2) Reading Method 2

① On the monitoring software side, check that [0081H (Status flag 1) 2^{15}: Change in key operation] has been set to 1 (Yes), then set 007FH (Key operation change flag clearing) to 0001H (Clear change flag).

② Set the program depending on the acknowledgement or negative acknowledgement as follows.

When acknowledgement is returned:

Consider it as settings completed, and read all set values.

When Error code 5 (35H, Shinko protocol) or Exception code 18 (12H, MODBUS protocol) is returned as a negative acknowledgement:

Consider it as still in setting mode, and read the requisite minimum pieces of data such as 0080H (Conductivity), 0090H (Temperature), 0081H (Status flag 1), 0091H (Status flag 2), then return to step ①.

Thus, programs which do not affect the scan time can be created using the methods described above, even if set values on the monitoring software will not be updated until settings are complete.

11.8.3 Note when Sending All Set Values Simultaneously

• If A□□ type is changed at Data item 0005H (A11 type), 0050H (A12 type), 0051H (A21 type) or 0052H (A22 type), the A11, A12, A21 or A22 value will default to 0.00 or 0.0.

Output status of A11, A12, A21 or A22 will also be initialized.

First, send the A11, A12, A21, A22 type, then send the A11, A12, A21, A22 value set at Data item 0006H (A11 value), 0053H (A12 value), 0054H (A21 value) and 0055H (A22 value).

12. Specifications

12.1 Standard Specifications

Rating

Rated Scale	Input		Cell Constant	Input Range	Resolution
	Conductivity	Conductivity	Cell constant 0.01/cm	0.000 to 2.000 μS/cm	0.001 μS/cm
				0.00 to 20.00 μS/cm	0.01 μS/cm
				0.00 to 50.00 μS/cm	0.01 μS/cm
				0.000 to 0.200 mS/m	0.001 mS/m
				0.000 to 2.000 mS/m	0.001 mS/m
				0.000 to 5.000 mS/m	0.001 mS/m
				0.00 to 2.00 mg/L	0.01 mg/L
				0.0 to 20.0 mg/L	0.1 mg/L
				0.0 to 50.0 mg/L	0.1 mg/L
			Cell constant 0.1/cm	0.00 to 20.00 μS/cm	0.01 μS/cm
				0.00 to 50.00 μS/cm	0.01 μS/cm
				0.0 to 500.0 μS/cm	0.1 μS/cm
				0.000 to 2.000 mS/m	0.001 mS/m
				0.000 to 5.000 mS/m	0.001 mS/m
				0.00 to 50.00 mS/m	0.01 mS/m
				0.0 to 20.0 mg/L	0.1 mg/L
				0 to 200 mg/L	1 mg/L
				0 to 500 mg/L	1 mg/L
			Cell constant 1.0/cm	0.0 to 200.0 μS/cm	0.1 μS/cm
				0.00 to 20.00 mS/m	0.01 mS/m
				0 to 200 mg/L	1 mg/L
	Temper-ature (*)	Pt100		0.0 to 100.0℃	0.1℃
		Pt1000		0.0 to 100.0℃	0.1℃
	(*) For the temperature indication, decimal point place is selectable.				
Input	2-electrode Conductivity Sensor (Temperature element: Pt100) 2-electrode Conductivity Sensor (Temperature element: Pt1000)				

Power Supply Voltage	**Model**	**WIL-102-ECL**	**WIL-102-ECL 1**
	Power supply voltage	100 to 240 V AC 50/60 Hz	24 V AC/DC 50/60 Hz
	Allowable voltage fluctuation range	85 to 264 V AC	20 to 28 V AC/DC

General Structure

External Dimensions	30 x 88 x 108 mm (W x H x D, including socket)
Mounting	DIN rail
Case	Material: Flame-resistant resin, Color: Light gray
Panel	Membrane sheet

Indication Structure	Display	
	Conductivity Display	Red LED 4-digits, character size: 10 x 4.6 m (H x W)
	Temperature Display	Red LED 4-digits, character size: 10 x 4.6 m (H x W)
	Action Indicators	
	PWR (Yellow)	Lit when power supply is ON.
	A1 (Red)	Lit when A1 output is ON. (Unlit when TA2 option is added.)
	A2 (Yellow)	Lit when A2 output is ON. (Unlit when TA option or TA2 option is added.)
	T/R (Yellow)	Lit while in Serial communication TX output (transmitting).
Setting Structure	Setting method: Input system using membrane sheet key	

Indication Performance

Repeatability	Conductivity: ±0.5% of input span TDS conversion: ±1.5% of input span
Linearity	Conductivity: ±0.5% of input span TDS conversion: ±1.5% of input span
Indication Accuracy	Temperature: ±1℃
Input Sampling Period	250 ms (2 inputs)
Time Accuracy	Within ±1% of setting time

Standard Functions

Conductivity Calibration	Calibrate Conductivity Zero adjustment first, followed by Conductivity Span adjustment. However, if Loc 1 (Lock 1), Loc2 (Lock 2) or Loc3 (Lock 3) is selected in [Set value lock] (p.31), the unit cannot move to Conductivity calibration mode. In Conductivity Zero adjustment, adjustment is performed so that conductivity becomes 0, without immersing the 2-electrode Conductivity Sensor in the standard solution. In Conductivity Span adjustment, the 2-electrode Conductivity Sensor is immersed and adjustment is performed while checking conductivity. However, it is effective within the input rated range regardless of the adjustment value.
Temperature Calibration	When a sensor cannot be set at the exact location where measurement is desired, the resulting measured temperature may deviate from the temperature in the desired location. In this case, the desired temperature can be set for the desired location by setting a temperature calibration value. However, it is effective within the input rated range regardless of the temperature calibration value.
TDS Conversion	TDS stands for Total Dissolved Solids. Conductivity of a solution results from the amount of salt, minerals or dissolved gas. Conductivity is an index indicating the total amount of a substance in a solution, and TDS indicates only the amount of all dissolved solid substances. TDS can be used correctly to compare the two solutions in which one ingredient, such as NaCl, is included. However, for comparison between a solution in which one ingredient such as NaCl is included and the other solution in which more than one ingredient is included, TDS error will occur. TDS and conductivity are expressed with the following formula. For Conductivity SI unit (mS/m): TDS (mg/L) = L (mS/m) × K × 10 For Conductivity older unit (μS/cm): TDS (mg/L) = L (μS/cm) × K K: TDS conversion factor, L: Conductivity

<table>
<tr><td>Serial Communication</td><td colspan="4">The following operations can be carried out from an external computer.
(1) Reading and setting of various set values
(2) Reading of conductivity, temperature and status
(3) Function change, adjustment
(4) Reading and setting of user save area</td></tr>
<tr><td></td><td>Cable Length</td><td colspan="4">1.2 km (Max), Cable resistance value: Within 50 Ω (Terminators are not necessary, but if used, use 120 Ω minimum on both sides.)</td></tr>
<tr><td></td><td>Communication Line</td><td colspan="4">EIA RS-485</td></tr>
<tr><td></td><td>Communication Method</td><td colspan="4">Half-duplex communication</td></tr>
<tr><td></td><td>Communication Speed</td><td colspan="4">9600, 19200, 38400 bps (Selectable by keypad)</td></tr>
<tr><td></td><td>Synchronization Method</td><td colspan="4">Start-stop synchronization</td></tr>
<tr><td></td><td>Code Form</td><td colspan="4">ASCII, Binary</td></tr>
<tr><td></td><td>Communication Protocol</td><td colspan="4">Shinko protocol, MODBUS ASCII, MODBUS RTU (Selectable by keypad)</td></tr>
<tr><td></td><td>Data Bit/Parity</td><td colspan="4">8 bits/No parity, 7 bits/No parity, 8 bits/Even, 7 bits/Even, 8 bits/Odd,
7 bits/Odd (Selectable by keypad)</td></tr>
<tr><td></td><td>Stop Bit</td><td colspan="4">1, 2 (Selectable by keypad)</td></tr>
<tr><td></td><td>Error Correction</td><td colspan="4">Command request repeat system</td></tr>
<tr><td></td><td>Error Detection</td><td colspan="4">Parity check, Checksum (Shinko protocol), LRC (MODBUS protocol ASCII), CRC-16 (MODBUS protocol RTU)</td></tr>
<tr><td></td><td>Data Format</td><td>Communication Protocol</td><td>Shinko Protocol</td><td>MODBUS ASCII</td><td>MODBUS RTU</td></tr>
<tr><td></td><td></td><td>Start bit</td><td>1</td><td>1</td><td>1</td></tr>
<tr><td></td><td></td><td>Data bit</td><td>7</td><td>7 (8) Selectable</td><td>8</td></tr>
<tr><td></td><td></td><td>Parity</td><td>Even</td><td>Even (No parity, Odd) Selectable</td><td>No parity (Even, Odd) Selectable</td></tr>
<tr><td></td><td></td><td>Stop bit</td><td>1</td><td>1 (2) Selectable</td><td>1 (2) Selectable</td></tr>
</table>

Insulation/Dielectric Strength

<table>
<tr><td>Circuit Insulation Configuration</td><td> 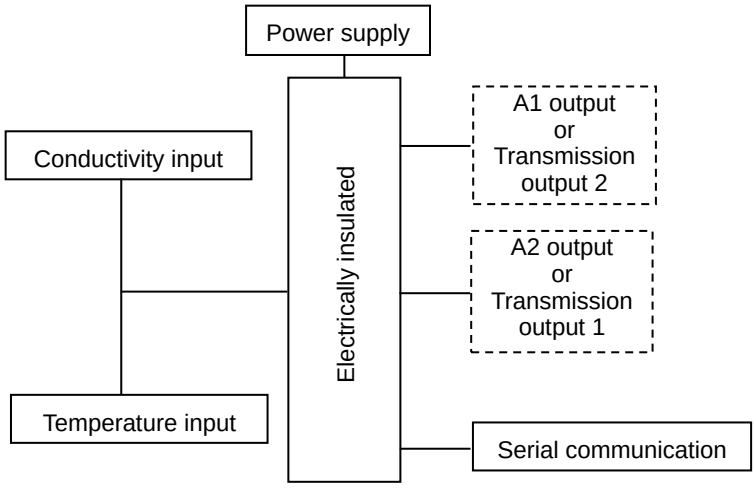

: When the corresponding option is ordered.
Insulation Resistance: 10 MΩ minimum, at 500 V DC</td></tr>
<tr><td>Dielectric Strength</td><td>Between power terminal - ground (GND): 1.5 kV AC for 1 minute
Between input terminal - ground (GND): 1.5 kV AC for 1 minute
Between input terminal - power terminal: 1.5 kV AC for 1 minute</td></tr>
</table>

Attached Functions

<table>
<tr><td>Set Value Lock</td><td>Lock 1: None of the set values can be changed.
Lock 2: Only A11, A12, A21 and A22 values can be changed.
Lock 3: All set values – except Sensor cell constant, Measurement unit, Measurement range, Conductivity Zero and Span adjustment values, Temperature calibration value, Transmission output 1 Zero and Span adjustment values, Transmission output 2 Zero and Span adjustment values – can be temporarily changed.
However, they revert to their previous value after the power is turned off because they are not saved in the non-volatile IC memory.</td></tr>
<tr><td>Conductivity Input Sensor Correction</td><td>When a sensor cannot be set at the exact location where measurement is desired, the sensor-measured conductivity may deviate from the conductivity in the measured location. In such a case, desired conductivity can be obtained by adding a sensor correction value. However, it is effective within the measurement range regardless of the sensor correction value.</td></tr>
<tr><td>Outside Measurement Range</td><td>When the conductivity measured value or TDS conversion factor is outside the measurement range:
<table>
<tr><th>Conductivity Display</th><th>Temperature Display</th></tr>
<tr><td>Conductivity or TDS conversion high limit is flashing.</td><td>Measured temperature</td></tr>
</table>
When measured temperature is outside the measurement range, the following will be indicated.
<table>
<tr><th>Conductivity Display</th><th>Temperature Display</th></tr>
<tr><td>Measured conductivity</td><td>Less than 0.0℃: Er04</td></tr>
<tr><td>Measured conductivity</td><td>Exceeding 110.0℃: Er03</td></tr>
</table></td></tr>
<tr><td>Power Failure Countermeasure</td><td>The setting data is backed up in the non-volatile IC memory.</td></tr>
<tr><td>Self-diagnosis</td><td>The CPU is monitored by a watchdog timer, and if an abnormal status occurs, the instrument is switched to warm-up status.</td></tr>
<tr><td>Warm-up Indication</td><td>For approx. 4 seconds after the power is switched ON, the input characters are indicated on the Conductivity Display and Temperature Display.
<table>
<tr><th>Display</th><th>Character</th><th>Measurement Unit</th></tr>
<tr><td rowspan="3">Conductivity Display</td><td>conD</td><td>Conductivity (μS/cm)</td></tr>
<tr><td>µS □□</td><td>Conductivity (mS/m)</td></tr>
<tr><td>rdu□</td><td>TDS conversion (mg/L)</td></tr>
</table>
<table>
<tr><th>Display</th><th>Character</th><th>Input Temperature Specification (*)</th><th>Selection Item in [Pt100 Input Wire Type (p.30)]</th></tr>
<tr><td rowspan="3">Temperature Display</td><td>Pt □2</td><td rowspan="2">Pt100</td><td>Pt □2: 2-wire type</td></tr>
<tr><td>Pt □3</td><td>Pt □3: 3-wire type</td></tr>
<tr><td>Pt 10</td><td>Pt1000</td><td></td></tr>
</table>
(*) This input temperature specification was specified at the time of ordering.</td></tr>
<tr><td>Display Sleep Function</td><td>Conductivity, Temperature or No indication can be selected in [Display selection (p.34)], which is indicated in Conductivity/Temperature Display Mode. If Conductivity and/or Temperature is selected, and if indication time is set, the displays become unlit after the indication time has passed from no operation status. If any errors occur, or if any key is pressed, the display will re-light. If the indication time is set to 0, the display remains lit, and this function does not work.</td></tr>
<tr><td>Auto-light Function</td><td>Automatically measures and controls brightness of the Conductivity Display, Temperature Display and action indicators.</td></tr>
<tr><td>Cable Length Correction</td><td>If Pt □2 (2-wire type) is selected in [Pt100 input wire type (p. 30)], and if sensor cable is too long, temperature measurement error will occur due to cable resistance. This can be corrected by setting the cable length correction value and cable cross-section area.</td></tr>
</table>

<table>
<tr><td rowspan="6">Error Code</td><td colspan="5">The following error codes flash on the Temperature Display.</td></tr>
<tr><th>Error Code</th><th>Error Type</th><th>Error Contents</th><th>Description</th><th>Occurrence</th></tr>
<tr><td>Er01</td><td>Fail</td><td>Temp. Sensor burnout</td><td>Temperature sensor lead wire is burnt out.</td><td rowspan="4">When measuring or calibrating</td></tr>
<tr><td>Er02</td><td>Fail</td><td>Temp. Sensor short-circuited</td><td>Temperature sensor lead wire is short-circuited.</td></tr>
<tr><td>Er03</td><td>Error</td><td>Outside temp. compensation</td><td>Measured temperature has exceeded 110.0℃.</td></tr>
<tr><td>Er04</td><td>Error</td><td>Outside temp. compensation</td><td>Measured temperature is less than 0.0℃.</td></tr>
<tr><td colspan="5">(Abbreviation: Temp.: Temperature)</td></tr>
</table>

Other

Power Consumption	Approx. 8 VA
Ambient Temperature	0 to 50℃ (32 to 122℉)
Ambient Humidity	35 to 85 %RH (non-condensing)
Altitude	2,000 m or less
Weight	Approx. 200 g (including the socket)
Accessories Included	Instruction manual: 1 copy Unit label: 1 sheet
Accessories Sold Separately	Socket: ASK-001-1 (Finger-safe and screw fall prevention)
Environmental Specification	RoHS directive compliant

12.2 Optional Specifications

A□□ Output (Option Code: EVT or TA)

A□□ Output		If the measured value exceeds the A□□ value, the A□□ output will be turned ON for each A□□ output type. A1 or A2 output turns ON depending on the settings in [A1/A2 output allocation (p.35)] and [Output ON time/OFF time when A1/A2 output ON (pp.35, 36)]. Regardless of options being ordered, A□□ output status can be read via Status flag 1 (A11, A12, A21, A22 output flag bit) in Serial communication. A□□ output status, when input errors occur, differs depending on the selection in [A□□ output when input errors occur (p.29)] as follows. • If oFF (Disabled) is selected in [A□□ output when input errors occur (p.29)], the A□□ output and A□□ output status will be turned OFF if input errors occur. • If on (Enabled) is selected in [A□□ output when input errors occur (p.29)], the A□□ output and A□□ output status will be maintained if input errors occur. During conductivity calibration, A□□ action is forced OFF. If Transmission output 1 (TA option) is ordered, only A1 output can be added.
	Action	ON/OFF action
	A□□ ON side, A□□ OFF side	Setting range differs depending on the selection of A□□ type and measurement range. **• Conductivity input low limit and high limit actions**

Cell constant 0.01/cm

Measurement Range	Setting Range
0.000 to 2.000 μS/cm	0.000 to 0.200 μS/cm
0.00 to 20.00 μS/cm	0.00 to 2.00 μS/cm
0.00 to 50.00 μS/cm	0.00 to 5.00 μS/cm
0.000 to 0.200 mS/m	0.000 to 0.020 mS/m
0.000 to 2.000 mS/m	0.000 to 0.200 mS/m
0.000 to 5.000 mS/m	0.000 to 0.500 mS/m
0.00 to 2.00 mg/L	0.00 to 0.20 mg/L
0.0 to 20.0 mg/L	0.0 to 2.0 mg/L
0.0 to 50.0 mg/L	0.0 to 5.0 mg/L

Cell constant 0.1/cm

Measurement Range	Setting Range
0.00 to 20.00 μS/cm	0.00 to 2.00 μS/cm
0.00 to 50.00 μS/cm	0.00 to 5.00 μS/cm
0.0 to 500.0 μS/cm	0.0 to 50.0 μS/cm
0.000 to 2.000 mS/m	0.000 to 0.200 mS/m
0.000 to 5.000 mS/m	0.000 to 0.500 mS/m
0.00 to 50.00 mS/m	0.00 to 5.00 mS/m
0.0 to 20.0 mg/L	0.0 to 2.0 mg/L
0 to 200 mg/L	0 to 20 mg/L
0 to 500 mg/L	0 to 50 mg/L

Cell constant 1.0/cm

Measurement Range	Setting Range
0.0 to 200.0 μS/cm	0.0 to 20.0 μS/cm
0.00 to 20.00 mS/m	0.00 to 2.00 mS/m
0 to 200 mg/L	0 to 20 mg/L

• Temperature input low limit and high limit actions

Measurement Range	Setting Range
0.0 to 100.0℃	0.0 to 10.0℃

<table>
<tr><td></td><td>A□□ High/Low limits independent upper side span,
A□□ High/Low limits independent lower side span</td><td>• Conductivity input: Measurement range low limit to Measurement range high limit (*1)
• Temperature input: 0.0 to 100.0℃ (*2)
(*1) Measurement unit and decimal point place follow the measurement range.
(*2) The placement of the decimal point does not follow the selection. It is fixed.</td></tr>
<tr><td></td><td>A□□ hysteresis</td><td>Setting range differs depending on A□□ type and measurement range.
• Conductivity input
Cell constant 0.01/cm
<table>
<tr><th>Measurement Range</th><th>Setting Range</th></tr>
<tr><td>0.000 to 2.000 μS/cm</td><td>0.001 to 0.200 μS/cm</td></tr>
<tr><td>0.00 to 20.00 μS/cm</td><td>0.01 to 2.00 μS/cm</td></tr>
<tr><td>0.00 to 50.00 μS/cm</td><td>0.01 to 5.00 μS/cm</td></tr>
<tr><td>0.000 to 0.200 mS/m</td><td>0.001 to 0.020 mS/m</td></tr>
<tr><td>0.000 to 2.000 mS/m</td><td>0.001 to 0.200 mS/m</td></tr>
<tr><td>0.000 to 5.000 mS/m</td><td>0.001 to 0.500 mS/m</td></tr>
<tr><td>0.00 to 2.00 mg/L</td><td>0.01 to 0.20 mg/L</td></tr>
<tr><td>0.0 to 20.0 mg/L</td><td>0.1 to 2.0 mg/L</td></tr>
<tr><td>0.0 to 50.0 mg/L</td><td>0.1 to 5.0 mg/L</td></tr>
</table>
Cell constant 0.1/cm
<table>
<tr><th>Measurement Range</th><th>Setting Range</th></tr>
<tr><td>0.00 to 20.00 μS/cm</td><td>0.01 to 2.00 μS/cm</td></tr>
<tr><td>0.00 to 50.00 μS/cm</td><td>0.01 to 5.00 μS/cm</td></tr>
<tr><td>0.0 to 500.0 μS/cm</td><td>0.1 to 50.0 μS/cm</td></tr>
<tr><td>0.000 to 2.000 mS/m</td><td>0.001 to 0.200 mS/m</td></tr>
<tr><td>0.000 to 5.000 mS/m</td><td>0.001 to 0.500 mS/m</td></tr>
<tr><td>0.00 to 50.00 mS/m</td><td>0.01 to 5.00 mS/m</td></tr>
<tr><td>0.0 to 20.0 mg/L</td><td>0.1 to 2.0 mg/L</td></tr>
<tr><td>0 to 200 mg/L</td><td>1 to 20 mg/L</td></tr>
<tr><td>0 to 500 mg/L</td><td>1 to 50 mg/L</td></tr>
</table>
Cell constant 1.0/cm
<table>
<tr><th>Measurement Range</th><th>Setting Range</th></tr>
<tr><td>0.0 to 200.0 μS/cm</td><td>0.1 to 20.0 μS/cm</td></tr>
<tr><td>0.00 to 20.00 mS/m</td><td>0.01 to 2.00 mS/m</td></tr>
<tr><td>0 to 200 mg/L</td><td>1 to 20 mg/L</td></tr>
</table>
• Temperature input
<table>
<tr><th>Measurement Range</th><th>Setting Range</th></tr>
<tr><td>0.0 to 100.0℃</td><td>0.1 to 10.0℃</td></tr>
</table></td></tr>
<tr><td></td><td>A□□ type</td><td>One type can be selected from the following via the keypad.
• No action
• Conductivity input low limit action
• Conductivity input high limit action
• Temperature input low limit action
• Temperature input high limit action
• Error output [When the error type is “Error” (p.72), the output is turned ON.]
• Fail output [When the error type is “Fail” (p.72), the output is turned ON.]
• Conductivity input High/Low limits independent action
• Temperature input High/Low limits independent action</td></tr>
</table>

	Output	Relay contact, 1a	
		Control capacity	3A 250 V AC (Resistive load) 1A 250 V AC (Inductive load cosϕ=0.4)
		Electrical life	100,000 cycles
	A□□ ON delay time	0 to 9999 seconds	
	A□□ OFF delay time	0 to 9999 seconds	
	A1, A2 output allocations	For A1 (or A2) output, A11 type, A12 type, A21 type and/or A22 type can be allocated. Output is OR output.	
	Output ON time/ OFF time when A1/A2 output ON	If Output ON time and OFF time are set, A1 (or A2) output can be turned ON/OFF in a configured cycle when A1 (or A2) output is ON.	
	Conductivity input error alarm	Detects actuator trouble. Even if conductivity input error alarm time has elapsed, and if conductivity input does not become higher than conductivity input error alarm band, the unit assumes that actuator trouble has occurred, and writes Status flag 2 (A1, A2 conductivity input error alarm output flag bit). In Serial communication, status can be read by reading Status flag 2 (A1, A2 conductivity input error alarm output flag bit). Conductivity input error alarm is disabled during Conductivity Zero or Span adjustment. Conductivity input error alarm is enabled only when Ec_L (Conductivity input low limit action) or Ec_H (Conductivity input high limit action) is selected in [A11, A12, A21, A22 type (pp.23, 24)].	

Transmission Output 1 (Option Code: TA)

Transmission Output 1		Converting conductivity or temperature to analog signal every input sampling period, and outputs the value in current. If oFF□ (No temperature compensation) is selected in [Temperature compensation method (p.30)], and if TEMP (Temperature transmission) is selected in [Transmission output 1 type (p.32)], Transmission output 1 value will differ depending on the selection in [Temperature Display when no temperature compensation (p.34)] as follows. • If oFF□ (Unlit) or Srd□ (Reference temperature) is selected, the value set in [Reference temperature (p.30)] will be output. • If PV□□ (Measured value) is selected, the measured value will be output. If Transmission output 1 high limit and low limit are set to the same value, Transmission output 1 will be fixed at 4 mA DC.	
		Resolution	12000
		Current	4 to 20 mA DC (Load resistance: Max. 550 Ω)
		Output accuracy	Within ±0.3% of Transmission output 1 span
	Transmission output 1 adjustment	Fine adjustment of the Transmission output 1 can be performed via Transmission output 1 Zero and Span adjustments.	
	Transmission output 1 status when calibrating	Selects Transmission output 1 status when calibrating conductivity.	
		Last value HOLD	Retains the last value before conductivity calibration, and outputs it.
		Set value HOLD	Outputs the value set in [Transmission output 1 value HOLD when calibrating].
		Measured value	Outputs the measured value when calibrating conductivity.

Transmission Output 2 (Option Code: TA2)

Transmission Output 2		Converting conductivity or temperature to analog signal every input sampling period, and outputs the value in current. If oFF (No temperature compensation) is selected in [Temperature compensation method (p.30)], and if TEMP (Temperature transmission) is selected in [Transmission output 2 type (p.32)], Transmission output 2 value will differ depending on the selection in [Temperature Display when no temperature compensation (p.34)] as follows. • If oFF (Unlit) or Std (Reference temperature) is selected, the value set in [Reference temperature (p.30)] will be output. • If PV (Measured value) is selected, the measured value will be output. If Transmission output 2 high limit and low limit are set to the same value, Transmission output 2 will be fixed at 4 mA DC.	
		Resolution	12000
		Current	4 to 20 mA DC (Load resistance: Max. 550 Ω)
		Output accuracy	Within ±0.3% of Transmission output 2 span
	Transmission output 2 adjustment	Fine adjustment of the Transmission output 2 can be performed via Transmission output 2 Zero and Span adjustments.	
	Transmission output 2 status when calibrating	Selects Transmission output 2 status when calibrating conductivity.	
		Last value HOLD	Retains the last value before conductivity calibration, and outputs it.
		Set value HOLD	Outputs the value set in [Transmission output 2 value HOLD when calibrating].
		Measured value	Outputs the measured value when calibrating conductivity.

13. Troubleshooting

If any malfunction occurs, refer to the following items after checking that power is being supplied to the WIL-102-ECL.

13.1 Indication

Problem	Possible Cause	Solution
The Conductivity/ Temperature Display is unlit.	nonE (No Indication) is selected in [Display selection (p.34)].	Select ALL (Conductivity/ Temperature).
	The time set in [Indication time (p.34)] has passed.	If any key is pressed while displays are unlit, they will re-light. Set the indication time to a suitable time-frame.
The Conductivity/ Temperature Display is dark.	USE (Enabled) is selected in [Auto-light function (p.34)].	Select ---- (Disabled).
Indication of the Conductivity/Temperature Display is unstable or irregular.	Conductivity calibration and temperature calibration may not have finished.	Perform conductivity calibration and temperature calibration.
	Specifications of 2-electrode Conductivity Sensor may not be suitable.	Replace the sensor with a suitable one.
	There may be equipment that interferes with or makes noise near the WIL-102-ECL.	Keep WIL-102-ECL clear of any potentially disruptive equipment. Try [Grounding of shield wire terminal (E)].
Temperature Display is unlit.	oFF (Unlit) is selected in [Temperature Display when no temperature compensation (p.34)].	Select Std (Reference temperature) or PV (Measured value).
[Er 01] is flashing on the Temperature Display.	The temperature sensor lead wire is burnt out.	Replace the temperature sensor.
[Er02] is flashing on the Temperature Display.	The temperature sensor lead wire is short-circuited.	Replace the temperature sensor.
[Er03] is flashing on the Temperature Display.	Measured temperature has exceeded 110.0℃.	Check the environment of measurement location.
[Er04] is flashing on the Temperature Display.	Measured temperature is less than 0.0℃.	Check the environment of measurement location.
[Err 1] is indicating on the Conductivity Display.	Internal memory is defective.	Contact our agency or us.

・Grounding of shield wire terminal (E)
If the indication fluctuates due to noise, ground the shield wire terminal (E).
However, depending on the installation environment, the symptom may not be improved.
In this case, disconnect the grounding of the shield wire terminal (E) and return it to the original state.
(Depending on the type of sensor, the cable for the shield wire terminal (E) may not be available.)

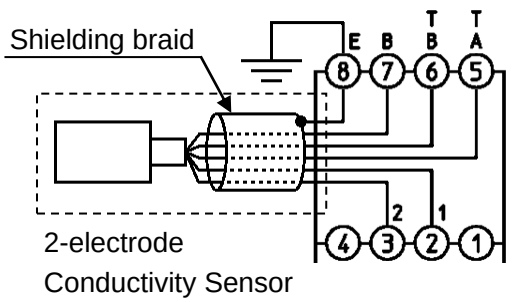

13.2 Key Operation

Problem	Possible Cause	Solution
None of the set values can be changed. The values do not change by the △, ▽ keys.	Loc 1 (Lock 1) is selected in [Set value lock (p.31)].	Select ---- (Unlock).
Only A□□ value can be set. Other settings are impossible. The values do not change by the △, ▽ keys.	Loc2 (Lock 2) is selected in [Set value lock (p.31)].	Select ---- (Unlock).

13.3 Calibration

Problem	Possible Cause	Solution
Span adjustment does not work or does not work well	Is Zero adjustment being performed with the 2-electrode Conductivity Sensor immersed in the standard solution?	・Perform Zero adjustment without immersing the sensor in the standard solution. ・Clear the adjustment by hanging the cell constant (p.22), measurement unit (p.22), and measurement range (p.23) of the sensor, and then perform re-calibration.

13.4 Communication

Check that power is being supplied to the master and slave that customers use.
If communication failure still occurs, check the following.

Problem	Possible Cause	Solution
Communication failure	Communication cable is not securely connected, or is disconnected/defective.	Check the communication cable and connector.
	Incorrect wiring of the communication cable and/or connector	Check the communication cable and connector.
	Imperfect contact between the communication cable and the connector, or between the communication connector and instrument port	Check the communication cable and connector.
	Communication speed of the slave does not match that of the master.	Check the communication speed of the slave and master.
	The data bit, parity and stop bit of the master do not correspond to those of the slave.	Check the data bit, parity and stop bit of the master and the slave.
	The instrument number (address) of the slave does not correspond to that of the command.	Check the instrument number (address) of the slave and command.
	The instrument numbers (addresses) are duplicated in multiple slaves.	Check the instrument numbers (addresses) of the slave.
	Make sure that the program is appropriate for the transmission timing.	Check the program.

Although communication is occurring, the response is negative acknowledge-ment.	A non-existent command code has been sent.	Check the command code.
	The setting command data exceeds the setting range of the slave.	Check the setting range of the slave.
	The WIL-102-ECL cannot be set during calibration mode.	Check the slave status.
	The WIL-102-ECL is in the front keypad operation setting mode.	Return the unit to Conductivity/ Temperature Display Mode.

14. Temperature Compensation Method

14.1 Temperature Compensation Based on the Temperature Characteristics of NaCl

When the main ingredient of the salt contained in a sample is NaCl, use temperature compensation method based on the temperature characteristics of NaCl.
Conductivity of NaCl solution varies with the ratio based on the conductivity at 25℃ as shown below.
The conductivity at 25℃ is calculated on the basis of the conductivity ratio at each temperature in (Table 14.1-1).

(Table 14.1-1)

Temperature (℃)	Conductivity ratio of NaCl	Coefficient
0	0.542	1.845
5	0.626	1.596
10	0.715	1.399
15	0.806	1.240
20	0.902	1.109
25	1.000	1.000
30	1.101	0.908
35	1.205	0.830
40	1.312	0.762
45	1.420	0.704
50	1.531	0.653
55	1.643	0.609
60	1.757	0.569
65	1.872	0.534
70	1.987	0.503
75	2.103	0.476
80	2.219	0.451
85	2.335	0.428
90	2.450	0.408
95	2.564	0.390
100	2.677	0.374

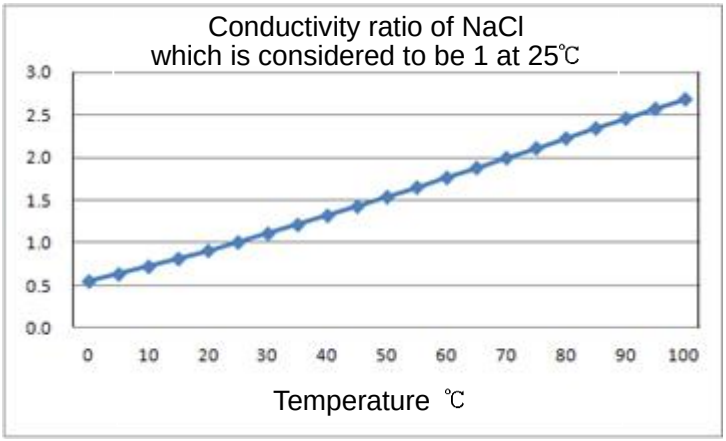

(Fig.14.1-1)

14.2 How to Input Temperature Coefficient

Temperature compensation is conducted using temperature coefficient (%/℃) and a randomly selected reference temperature.
Conductivity of the solution varies depending on the temperature.
If temperature rises by 1℃, the conductivity rises by 2% at 25℃ basis in general.
Temperature coefficient differs depending on the solution type and its concentration, which ranges from 0.50 to 2.50.
By inputting the temperature coefficient, temperature compensation can be calculated to find the conductivity at 25℃.
Temperature coefficient 2.00 %/℃ can be used for most of solutions.
If temperature coefficient of solution is already-known, enter the value. (Table 14.2-1)

If the conductivity at an arbitrary temperature T℃ is already-known, and if reference temperature is ST℃, conductivity $C_{(ST)}$ at the reference temperature can be obtained according to the following formula.

$$C_{(ST)} = \frac{C_{(T)}}{(1 + 0.01 \times \alpha \times (T - ST))}$$

$C_{(ST)}$: Conductivity of the solution at ST℃
$C_{(T)}$: Conductivity of the solution at T℃
α : Temperature coefficient of conductivity (%)
T: Arbitrary temperature T℃
ST: Reference temperature ST℃

(Table 14.2-1)

Sub-stance	Tempe-rature (℃)	Concen-tration Wt%	Conduc-tivity S/m	Temperature coefficient (%/℃)	Sub-stance	Tempe-rature (℃)	Concen-tration Wt%	Conduc-tivity S/m	Temperature coefficient (%/℃)
NaOH	15	5	19.69	2.01	NaCl	18	5	6.72	2.17
		10	31.24	2.17			10	12.11	2.14
		15	34.63	2.49			15	16.42	2.12
		20	32.70	2.99			20	19.57	2.16
		30	20.22	4.50			25	21.35	2.27
		40	11.64	6.48	Na_2SO_4	18	5	4.09	2.36
KOH	15	25.2	54.03	2.09			10	6.87	2.49
		29.4	54.34	2.21			15	8.86	2.56
		33.6	52.21	2.36	Na_2CO_3	18	5	4.56	2.52
		42	42.12	2.83			10	7.05	2.71
NH_3	15	0.1	0.0251	2.46			15	8.36	2.94
		1.6	0.0867	2.38	KCl	18	5	6.90	2.01
		4.01	0.1095	2.50			10	13.59	1.88
		8.03	0.1038	2.62			15	20.20	1.79
		16.15	0.0632	3.01			20	26.77	1.68
HF	18	1.5	1.98	0.72			21	28.10	1.68
		4.8	5.93	0.66	KBr	15	5	4.65	2.06
		24.5	28.32	0.58			10	9.28	1.94
HCl	18	5	39.48	1.58			20	19.07	1.77
		10	63.02	1.56	KCN	15	3.25	5.07	2.07
		20	76.15	1.54			6.5	10.26	1.98
		30	66.20	1.52			-	-	-
H_2SO_4	18	5	20.85	1.21	NH_4Cl	18	5	9.18	1.98
		10	39.15	1.28			10	17.76	1.86
		20	65.27	1.45			15	25.86	1.71
		40	68.00	1.78			20	33.65	1.61
		50	54.05	1.93			25	40.25	1.54
		60	37.26	2.13	NH_4NO_3	15	5	5.90	2.03
		80	11.05	3.49			10	11.17	1.94
		100.14	1.87	0.30			30	28.41	1.68
		-	-	-			50	36.22	1.56
HNO_3	18	6.2	31.23		$CuSO_4$	18	2.5	10.90	2.13
		12.4	54.18				5	18.90	2.16
		31	78.19				10	32.00	2.18
		49.6	63.41				15	42.10	2.31
		62	49.64		CH_3COOH	18	10	15.26	1.69
H_3PO_4	15	10	5.66				15	16.19	1.74
		20	11.29				20	16.05	1.79
		40	20.70				30	14.01	1.86
		45	20.87				40	10.81	1.96
		50	20.73				60	4.56	2.06

14.3 Temperature Compensation Based on the Temperature Characteristics of Deionized Water

Conductivity of deionized water is calculated by adding conductivity of deionized water to conductivity caused by ionic impurities.

$C_{(T)} = F_{(T)} + G_{(T)}$

$C_{(T)}$: Conductivity of solution at T℃

$F_{(T)}$: Conductivity of deionized water at T℃

$G_{(T)}$: Conductivity caused by ionic impurities at T℃

Conductivity of Deionized Water

Conductivity of deionized water is caused by dissociation of water molecules.
The dissociation of water molecules is greatly affected by the change of temperature.
Conductivity of deionized water is measured based on the characteristics in (Table 14.3-1) (ASTM D 1125-91, JISK0130-1995).

(Table 14.3-1)

Temperature (℃)	Conductivity (μS/cm)
0	0.012
5	0.017
10	0.023
15	0.031
20	0.042
25	0.055
30	0.071
35	0.090
40	0.114
45	0.141
50	0.173
55	0.210
60	0.251
65	0.299
70	0.352
75	0.410
80	0.474
85	0.544
90	0.621
95	0.703
100	0.793

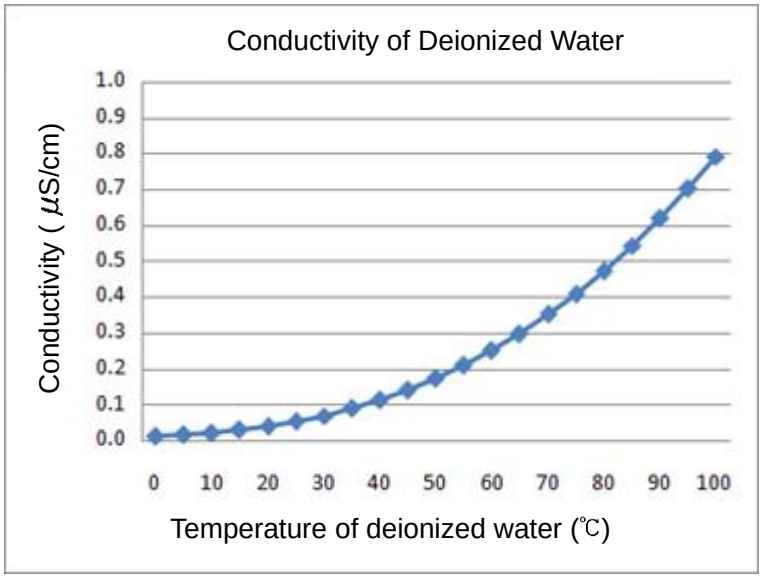

(Fig.14.3-1)

Conductivity Caused by Ionic Impurities

Conductivity caused by ionic impurities can be calculated based on the NaCl characteristics in Section 14.1 (p.79).

15. Character Tables

The following shows our character tables. Use data column for your reference.

Setting Groups

Character	Setting Group
F.nc.1	Conductivity Input Group
F.nc.2	Temperature Input Group
a.r.E.r	Basic Function Group

Temperature Calibration Mode

Character	Setting Item, Setting Range	Factory Default	Data
to□□ (*) □□.□	**Temperature calibration value** Setting range: -10.0 to 10.0℃	0.0℃	

(*) to□□ and temperature are displayed alternately.

Conductivity Calibration Mode

Character	Setting Item, Setting Range	Factory Default	Data
AdJ3(*1) 0.000	**Conductivity Zero adjustment value** See (Table 15-1). (p.82)	0.00	
AdJ5(*2) 1.000	**Conductivity Span adjustment value** Setting range: 0.700 to 1.300	1.000	

(*1) AdJ3 and conductivity are displayed alternately.
(*2) AdJ5 and conductivity are displayed alternately.

(Table 15-1)

Measurement Range		Conductivity Zero Adjustment Value Setting Range
Cell constant 0.01/cm	2.000 μS/cm	-0.200 to 0.200 μS/cm
	20.00 μS/cm	-2.00 to 2.00 μS/cm
	50.00 μS/cm	-5.00 to 5.00 μS/cm
	0.200 mS/m	-0.020 to 0.020 mS/m
	2.000 mS/m	-0.200 to 0.200 mS/m
	5.000 mS/m	-0.500 to 0.500 mS/m
	2.00 mg/L	-0.20 to 0.20 mg/L
	20.0 mg/L	-2.0 to 2.0 mg/L
	50.0 mg/L	-5.0 to 5.0 mg/L
Cell constant 0.1/cm	20.00 μS/cm	-2.00 to 2.00 μS/cm
	50.00 μS/cm	-5.00 to 5.00 μS/cm
	500.0 μS/cm	-50.0 to 50.0 μS/cm
	2.000 mS/m	-0.200 to 0.200 mS/m
	5.000 mS/m	-0.500 to 0.500 mS/m
	50.00 mS/m	-5.00 to 5.00 mS/m
	20.0 mg/L	-2.0 to 2.0 mg/L
	200 mg/L	-20 to 20 mg/L
	500 mg/L	-50 to 50 mg/L
Cell constant 1.0/cm	200.0 μS/cm	-20.0 to 20.0 μS/cm
	20.00 mS/m	-2.00 to 2.00 mS/m
	200 mg/L	-20 to 20 mg/L

Transmission Output 1 Adjustment Mode

Character	Setting Item, Setting Range	Factory Default	Data
AJE 1 □0.00	**Transmission output 1 Zero adjustment value** Setting range: ±5.00% of Transmission output 1 span	0.00%	
AJ5 1 □0.00	**Transmission output 1 Span adjustment value** Setting range: ±5.00% of Transmission output 1 span	0.00%	

Transmission Output 2 Adjustment Mode

Character	Setting Item, Setting Range	Factory Default	Data
AJE2 □0.00	**Transmission output 2 Zero adjustment value** Setting range: ±5.00% of Transmission output 2 span	0.00%	
AJ52 □0.00	**Transmission output 2 Span adjustment value** Setting range: ±5.00% of Transmission output 2 span	0.00%	

Conductivity Input Group

Character	Setting Item, Setting Range	Factory Default	Data
cELL □0.01	**Sensor cell constant** Selection item: □0.01 : 0.01/cm □□0.1 : 0.1/cm □□ 1.0 : 1.0/cm	0.01/cm	
coEF 1.000	**Cell constant correction value** Setting range: 0.001 to 5.000	1.000	
UnIT conD	**Measurement unit** Selection item: conD : Conductivity (μS/cm) SI □□ : Conductivity (mS/m) Td5□ : TDS conversion (mg/L)	Conductivity (μS/cm)	
rnG 2.000	**Measurement range** See (Table15-2) (p.83).	2.000 μS/cm	

(Table 15-2)

Cell Constant	Measurement Unit	Selection Item	Measurement Range
0.01/cm	Conductivity (μS/cm)	2.000	0.000 to 2.000 μS/cm
	Conductivity (μS/cm)	20.00	0.00 to 20.00 μS/cm
	Conductivity (μS/cm)	50.00	0.00 to 50.00 μS/cm
	Conductivity (mS/m)	0.200	0.000 to 0.200 mS/m
	Conductivity (mS/m)	2.000	0.000 to 2.000 mS/m
	Conductivity (mS/m)	5.000	0.000 to 5.000 mS/m
	TDS conversion (mg/L)	□2.00	0.00 to 2.00 mg/L
	TDS conversion (mg/L)	□20.0	0.0 to 20.0 mg/L
	TDS conversion (mg/L)	□50.0	0.0 to 50.0 mg/L
0.1/cm	Conductivity (μS/cm)	20.00	0.00 to 20.00 μS/cm
	Conductivity (μS/cm)	50.00	0.00 to 50.00 μS/cm
	Conductivity (μS/cm)	500.0	0.0 to 500.0 μS/cm
	Conductivity (mS/m)	2.000	0.000 to 2.000 mS/m
	Conductivity (mS/m)	5.000	0.000 to 5.000 mS/m
	Conductivity (mS/m)	50.00	0.000 to 50.00 mS/m
	TDS conversion (mg/L)	□20.0	0.0 to 20.0 mg/L
	TDS conversion (mg/L)	□200	0 to 200 mg/L
	TDS conversion (mg/L)	□500	0 to 500 mg/L
1.0/cm	Conductivity (μS/cm)	200.0	0.0 to 200.0 μS/cm
	Conductivity (mS/m)	20.00	0.00 to 20.00 mS/m
	TDS conversion (mg/L)	□200	0 to 200 mg/L

Character	Setting Item, Setting Range	Factory Default	Data
rdkt □0.50	**TDS conversion factor** Setting range: 0.30 to 1.00	0.50	
A11F ----	**A11 type** Selection item: ---- : No action Ec_L : Conductivity input low limit action Ec_H : Temperature input low limit action rTPL : Temperature input low limit action rTPH : Temperature input high limit action Error : Err output FAIL : Fail output EcHL : Conductivity input High/Low limits independent action rTHL : Temperature input High/Low limits independent action	No action	
A12F ----	**A12 type** Selection item: Same as those of A11 type	No action	
A21F ----	**A21 type** Selection item: Same as those of A11 type	No action	
A22F ----	**A22 type** Selection item: Same as those of A11 type	No action	
A11□ 0.000	**A11 value** Setting range: Conductivity input low limit, high limit actions: Measurement range low limit to Measurement range high limit (*1) Temperature input low limit, high limit actions: 0.0 to 100.0℃ (*2)	Conductivity input: 0.000 μS/cm Temperature input: 0.0℃	
A12□ 0.000	**A12 value** Setting range: Same as those of A11 value	Conductivity input: 0.000 μS/cm Temperature input: 0.0℃	
A21□ 0.000	**A21 value** Setting range: Same as those of A11 value	Conductivity input: 0.000 μS/cm Temperature input: 0.0℃	
A22□ 0.000	**A22 value** Setting range: Same as those of A11 value	Conductivity input: 0.000 μS/cm Temperature input: 0.0℃	
A11d hdiF	**A11 hysteresis type** Selection item: cdiF : Medium value hdiF : Reference value	Reference value	

(*1) The measurement unit and decimal point place follow the measurement range.

(*2) The placement of the decimal point does not follow the selection. It is fixed.

<table>
<tr><th>Character</th><th>Setting Item, Setting Range</th><th>Factory Default</th><th>Data</th></tr>
<tr><td>A1 1U
0.001</td><td>A11 ON side
(Table 15-3)
Conductivity input:
<table>
<tr><th colspan="2">Measurement Range</th><th>Setting Range</th></tr>
<tr><td rowspan="9">Cell constant 0.01/cm</td><td>0.000 to 2.000 μS/cm</td><td>0.000 to 0.200 μS/cm</td></tr>
<tr><td>0.00 to 20.00 μS/cm</td><td>0.00 to 2.00 μS/cm</td></tr>
<tr><td>0.00 to 50.00 μS/cm</td><td>0.00 to 5.00 μS/cm</td></tr>
<tr><td>0.000 to 0.200 mS/m</td><td>0.000 to 0.020 mS/m</td></tr>
<tr><td>0.000 to 2.000 mS/m</td><td>0.000 to 0.200 mS/m</td></tr>
<tr><td>0.000 to 5.000 mS/m</td><td>0.000 to 0.500 mS/m</td></tr>
<tr><td>0.00 to 2.00 mg/L</td><td>0.00 to 0.20 mg/L</td></tr>
<tr><td>0.0 to 20.0 mg/L</td><td>0.0 to 2.0 mg/L</td></tr>
<tr><td>0.0 to 50.0 mg/L</td><td>0.0 to 5.0 mg/L</td></tr>
<tr><td rowspan="9">Cell constant 0.1/cm</td><td>0.00 to 20.00 μS/cm</td><td>0.00 to 2.00 μS/cm</td></tr>
<tr><td>0.00 to 50.00 μS/cm</td><td>0.00 to 5.00 μS/cm</td></tr>
<tr><td>0.0 to 500.0 μS/cm</td><td>0.0 to 50.0 μS/cm</td></tr>
<tr><td>0.000 to 2.000 mS/m</td><td>0.000 to 0.200 mS/m</td></tr>
<tr><td>0.000 to 5.000 mS/m</td><td>0.000 to 0.500 mS/m</td></tr>
<tr><td>0.00 to 50.00 mS/m</td><td>0.00 to 5.00 mS/m</td></tr>
<tr><td>0.0 to 20.0 mg/L</td><td>0.0 to 2.0 mg/L</td></tr>
<tr><td>0 to 200 mg/L</td><td>0 to 20 mg/L</td></tr>
<tr><td>0 to 500 mg/L</td><td>0 to 50 mg/L</td></tr>
<tr><td rowspan="3">Cell constant 1.0/cm</td><td>0.0 to 200.0 μS/cm</td><td>0.0 to 20.0 μS/cm</td></tr>
<tr><td>0.00 to 20.00 mS/m</td><td>0.00 to 2.00 mS/m</td></tr>
<tr><td>0 to 200 mg/L</td><td>0 to 20 mg/L</td></tr>
</table>
Temperature input:
<table>
<tr><th>Measurement Range</th><th>Setting Range</th></tr>
<tr><td>0.0 to 100.0℃</td><td>0.0 to 10.0℃</td></tr>
</table></td><td>Conductivity input: 0.001 μS/cm
Temperature input: 1.0℃</td><td></td></tr>
<tr><td>A1 1L
0.001</td><td>A11 OFF side
Setting range: Same as those of A11 ON side (p.85)</td><td>Conductivity input: 0.001 μS/cm
Temperature input: 1.0℃</td><td></td></tr>
<tr><td>A12d
hdiF</td><td>A12 hysteresis type
Selection item: Same as those of A11 hysteresis type (p.84)</td><td>Reference value</td><td></td></tr>
<tr><td>A12U
0.001</td><td>A12 ON side
Setting range: Same as those of A11 ON side (P.85)</td><td>Conductivity input: 0.001 μS/cm
Temperature input: 1.0℃</td><td></td></tr>
<tr><td>A12L
0.001</td><td>A12 OFF side
Setting range: Same as those of A11 ON side (P.85)</td><td>Conductivity input: 0.001 μS/cm
Temperature input: 1.0℃</td><td></td></tr>
<tr><td>A2 1d
hdiF</td><td>A21 hysteresis type
Selection item: Same as those of A11 hysteresis type (p.84)</td><td>Reference value</td><td></td></tr>
<tr><td>A2 1U
0.001</td><td>A21 ON side
Setting range: Same as those of A11 ON side (P.85)</td><td>Conductivity input: 0.001 μS/cm
Temperature input: 1.0℃</td><td></td></tr>
<tr><td>A2 1L
0.001</td><td>A21 OFF side
Setting range: Same as those of A11 ON side (P.85)</td><td>Conductivity input: 0.001 μS/cm
Temperature input: 1.0℃</td><td></td></tr>
<tr><td>A22d
hdiF</td><td>A22 hysteresis type
Selection item: Same as those of A11 hysteresis type (p.84)</td><td>Reference value</td><td></td></tr>
</table>

Character	Setting Item, Setting Range	Factory Default	Data
A22U 0.001	**A22 ON side** Conductivity input: 0.001 μS/cm, Temperature input: 1.0℃ Setting range: Same as those of A11 ON side (p.85)		
A22L 0.001	**A22 OFF side** Conductivity input: 0.001 μS/cm, Temperature input: 1.0℃ Setting range: Same as those of A11 ON side (p.85)		
A11o □□□0	**A11 ON delay time** Setting range: 0 to 9999 seconds	0 seconds	
A12o □□□0	**A12 ON delay time** Setting range: 0 to 9999 seconds	0 seconds	
A21o □□□0	**A21 ON delay time** Setting range: 0 to 9999 seconds	0 seconds	
A22o □□□0	**A22 ON delay time** Setting range: 0 to 9999 seconds	0 seconds	
A11c □□□0	**A11 OFF delay time** Setting range: 0 to 9999 seconds	0 seconds	
A12c □□□0	**A12 OFF delay time** Setting range: 0 to 9999 seconds	0 seconds	
A21c □□□0	**A21 OFF delay time** Setting range: 0 to 9999 seconds	0 seconds	
A22c □□□0	**A22 OFF delay time** Setting range: 0 to 9999 seconds	0 seconds	
A11n 0.000	**A11 High/Low limits independent lower side span** Setting range: Conductivity input: Measurement range low limit to Measurement range high limit (*1) Temperature input: 0.0 to 100.0℃ (*2)	Conductivity input: 0.000 μS/cm Temperature input: 0.0℃	
A12n 0.000	**A12 High/Low limits independent lower side span** Setting range: Same as those of A11 High/Low limits independent lower side span (p.86)	Conductivity input: 0.000 μS/cm Temperature input: 0.0℃	
A21n 0.000	**A21 High/Low limits independent lower side span** Setting range: Same as those of A11 High/Low limits independent lower side span (p.86)	Conductivity input: 0.000 μS/cm Temperature input: 0.0℃	
A22n 0.000	**A22 High/Low limits independent lower side span** Setting range: Same as those of A11 High/Low limits independent lower side span (p.86)	Conductivity input: 0.000 μS/cm Temperature input: 0.0℃	
A11P 0.000	**A11 High/Low limits independent upper side span** Conductivity input: Measurement range low limit to Measurement range high limit (*1) Temperature input: 0.0 to 100.0℃(*2)	Conductivity input: 0.000 μS/cm Temperature input: 0.0℃	
A12P 0.000	**A12 High/Low limits independent upper side span** Setting range: Same as those of A11 High/Low limits independent upper side span (p.86)	Conductivity input: 0.000 μS/cm Temperature input: 0.0℃	
A21P 0.000	**A21 High/Low limits independent upper side span** Setting range: Same as those of A11 High/Low limits independent upper side span (p.86)	Conductivity input: 0.000 μS/cm Temperature input: 0.0℃	
A22P 0.000	**A22 High/Low limits independent upper side span** Setting range: Same as those of A11 High/Low limits independent upper side span (p.86)	Conductivity input: 0.000 μS/cm Temperature input: 0.0℃	

(*1) The measurement unit and decimal point place follow the measurement range.
(*2) The placement of the decimal point does not follow the selection. It is fixed.

<table>
<tr><th>Character</th><th>Setting Item, Setting Range</th><th>Factory Default</th><th>Data</th></tr>
<tr><td>A1H
0.001</td><td>A11 hysteresis</td><td>Conductivity input: 0.001 μS/cm
Temperature input: 1.0℃</td><td></td></tr>
<tr><td></td><td colspan="3">(Table 15-4)
Conductivity input:
<table>
<tr><th colspan="2">Measurement Range</th><th>Setting Range</th></tr>
<tr><td rowspan="9">Cell constant 0.01/cm</td><td>0.000 to 2.000 μS/cm</td><td>0.001 to 0.200 μS/cm</td></tr>
<tr><td>0.00 to 20.00 μS/cm</td><td>0.01 to 2.00 μS/cm</td></tr>
<tr><td>0.00 to 50.00 μS/cm</td><td>0.01 to 5.00 μS/cm</td></tr>
<tr><td>0.000 to 0.200 mS/m</td><td>0.001 to 0.020 mS/m</td></tr>
<tr><td>0.000 to 2.000 mS/m</td><td>0.001 to 0.200 mS/m</td></tr>
<tr><td>0.000 to 5.000 mS/m</td><td>0.001 to 0.500 mS/m</td></tr>
<tr><td>0.00 to 2.00 mg/L</td><td>0.01 to 0.20 mg/L</td></tr>
<tr><td>0.0 to 20.0 mg/L</td><td>0.1 to 2.0 mg/L</td></tr>
<tr><td>0.0 to 50.0 mg/L</td><td>0.1 to 5.0 mg/L</td></tr>
<tr><td rowspan="9">Cell constant 0.1/cm</td><td>0.00 to 20.00 μS/cm</td><td>0.01 to 2.00 μS/cm</td></tr>
<tr><td>0.00 to 50.00 μS/cm</td><td>0.01 to 5.00 μS/cm</td></tr>
<tr><td>0.0 to 500.0 μS/cm</td><td>0.1 to 50.0 μS/cm</td></tr>
<tr><td>0.000 to 2.000 mS/m</td><td>0.001 to 0.200 mS/m</td></tr>
<tr><td>0.000 to 5.000 mS/m</td><td>0.001 to 0.500 mS/m</td></tr>
<tr><td>0.00 to 50.00 mS/m</td><td>0.01 to 5.00 mS/m</td></tr>
<tr><td>0.0 to 20.0 mg/L</td><td>0.1 to 2.0 mg/L</td></tr>
<tr><td>0 to 200 mg/L</td><td>1 to 20 mg/L</td></tr>
<tr><td>0 to 500 mg/L</td><td>1 to 50 mg/L</td></tr>
<tr><td rowspan="3">Cell constant 1.0/cm</td><td>0.0 to 200.0 μS/cm</td><td>0.1 to 20.0 μS/cm</td></tr>
<tr><td>0.00 to 20.00 mS/m</td><td>0.01 to 2.00 mS/m</td></tr>
<tr><td>0 to 200 mg/L</td><td>1 to 20 mg/L</td></tr>
</table>
Temperature input:
<table>
<tr><th>Measurement Range</th><th>Setting Range</th></tr>
<tr><td>0.0 to 100.0 ℃</td><td>0.1 to 10.0 ℃</td></tr>
</table></td></tr>
<tr><td>A12H
0.001</td><td>A12 hysteresis
Setting range: Same as those of A11 hysteresis (p.87)</td><td>Conductivity input: 0.001 μS/cm
Temperature input: 1.0℃</td><td></td></tr>
<tr><td>A21H
0.001</td><td>A21 hysteresis
Setting range: Same as those of A11 hysteresis (p.87)</td><td>Conductivity input: 0.001 μS/cm
Temperature input: 1.0℃</td><td></td></tr>
<tr><td>A22H
0.001</td><td>A22 hysteresis
Setting range: Same as those of A11 hysteresis (p.87)</td><td>Conductivity input: 0.001 μS/cm
Temperature input: 1.0℃</td><td></td></tr>
<tr><td>IErr
oFF□</td><td>A□□ output when input errors occur
Selection item: on□□ : Enabled
oFF□ : Disabled</td><td>Disabled</td><td></td></tr>
<tr><td>FIT1
□□0.0</td><td>Conductivity input filter time constant
Setting range: 0.0 to 10.0 seconds</td><td>0.0 seconds</td><td></td></tr>
<tr><td>Cor□
0.000</td><td>Conductivity input sensor correction
Setting range: ±10% of measurement span (*)</td><td>0.000 μS/cm</td><td></td></tr>
<tr><td>3Err
□□□0</td><td>3-electrode Conductivity Sensor resistance
Setting range: 0 to 100 Ω</td><td>0 Ω</td><td></td></tr>
<tr><td>dFcT
□□20</td><td>Conductivity inputs for moving average
Setting range: 1 to 120</td><td>20</td><td></td></tr>
</table>

(*) The measurement unit and decimal point place follow the measurement range.

Temperature Input Group

Character	Setting Item, Setting Range	Factory Default	Data
TcMP nACL	**Temperature compensation method** nACL: Temperature compensation is conducted using temperature characteristics of NaCl. Select when the main salt ingredient in a sample is NaCl. TCOE: Temperature compensation is conducted using temperature coefficient (%/℃) and a randomly selected reference temperature. PURE: Temperature compensation is conducted using temperature characteristics of deionized water. OFF: No temperature compensation	NaCl	
tCOE 2.00	**Temperature coefficient** Setting range: -5.00 to 5.00 %/℃	2.00 %/℃	
TRNG 25.0	**Reference temperature** Setting range: 5.0 to 95.0℃ (*)	25.0℃	
dP2 0.0	**Decimal point place** 0 : No decimal point 0.0 : 1 digit after decimal point	1 digit after decimal point	
CONE PR3	**Pt100 input wire type** PR2 : 2-wire type PR3 : 3-wire type	3-wire type	
CABL 0.0	**Cable length correction** Setting range: 0.0 to 100.0 m	0.0 m	
CHEC 0.30	**Cable cross-section area** Setting range: 0.10 to 2.00 mm^2	0.30 mm^2	
FIT2 0.0	**Temperature input filter time constant** Setting range: 0.0 to 10.0 seconds	0.0 seconds	
dFCT 20	**Temperature inputs for moving average** Setting range: 1 to 120	20	

(*) The placement of the decimal point follows the selection.

Basic Function Group

Character	Setting Item, Setting Range	Factory Default	Data
Lock ----	**Set value lock** ---- : Unlock Loc 1 : Lock 1 Loc2 : Lock 2 Loc3 : Lock 3	Unlock	
CMNL MONL	**Communication protocol** MONL : Shinko protocol MODA : MODBUS ASCII mode MODR : MODBUS RTU mode	Shinko protocol	
CMNO 0	**Instrument number** Setting range: 0 to 95	0	
CMSP 96	**Communication speed** 96 : 9600 bps 192 : 19200 bps 384 : 38400 bps	9600 bps	
CMFT 7EVN	**Data bit/Parity** 8non : 8 bits/No parity 7non : 7 bits/No parity 8EVN : 8 bits/Even 7EVN : 7 bits/Even 8odd : 8 bits/Odd 7odd : 7 bits/Odd	7 bits/Even	

Character	Setting Item, Setting Range	Factory Default	Data
cnSt □□□1	**Stop bit** □□□1 : 1 bit □□□2 : 2 bits	1 bit	
Fro1 Ec□□	**Transmission output 1 type** Ec□□ : Conductivity transmission TEmP : Temperature transmission	Conductivity transmission	
FrH1 2.000	**Transmission output 1 high limit** Conductivity transmission: Transmission output 1 low limit to Conductivity range high limit Temperature transmission: Transmission output 1 low limit to 100.0℃	2.000 μS/cm	
FrL1 0.000	**Transmission output 1 low limit** Conductivity transmission: Conductivity range low limit to Transmission output 1 high limit Temperature transmission: 0.0℃ to Transmission output 1 high limit	0.000 μS/cm	
Fro2 TEmP	**Transmission output 2 type** Ec□□ : Conductivity transmission TEmP : Temperature transmission	Temperature transmission	
FrH2 100.0	**Transmission output 2 high limit** Conductivity transmission: Transmission output 2 low limit to Conductivity range high limit Temperature transmission: Transmission output 2 low limit to 100.0℃	100.0℃	
FrL2 □□0.0	**Transmission output 2 low limit** Conductivity transmission: Conductivity range low limit to Transmission output 2 high limit Temperature transmission: 0.0℃ to Transmission output 2 high limit	0.0℃	
Frc1 bEFH	**Transmission output 1 status when calibrating** bEFH : Last value HOLD SETH : Set value HOLD PVH□ : Measured value	Last value HOLD	
Fr51 0.000	**Transmission output 1 value HOLD when calibrating** Conductivity transmission: Conductivity range low limit to Conductivity range high limit Temperature transmission: 0.0 to 100.0℃	Conductivity transmission: 0.000 μS/cm Temperature transmission: 0.0℃	
Frc2 bEFH	**Transmission output 2 status when calibrating** bEFH : Last value HOLD SETH : Set value HOLD PVH□ : Measured value	Last value HOLD	
Fr52 □□0.0	**Transmission output 2 value HOLD when calibrating** Conductivity transmission: Conductivity range low limit to Conductivity range high limit Temperature transmission: 0.0 to 100.0℃	Conductivity transmission: 0.000 μS/cm Temperature transmission: 0.0℃	
LIGT -----	**Auto-light function** ----- : Disabled USE□ : Enabled	Disabled	
diSP ALL□	**Display selection**	Conductivity/Temperature	

	Conductivity Display	Temperature Display
ALL□	Conductivity	Temperature
Ec□□	Conductivity	No indication
TEmP	No indication	Temperature
nonE	No indication	No indication

Character	Setting Item, Setting Range	Factory Default	Data
rI nE 00.00	**Indication time** Setting range: 00.00 (Remains lit) 00.01 to 60.00 (Minutes.Seconds)	00.00	
oFdP oFF□	**Temperature Display when no temperature compensation** Selection item: oFF□ : Unlit rEd□ : Reference temperature Pb□□ : Measured value	Unlit	
A1oF A11□	**A1 output allocation** Selection item: A11□ : A11 type A12□ : A12 type A21□ : A21 type A22□ : A22 type A1AL : A11, A12 types A2AL : A21, A22 types A1A2 : A11, A21 types A2A2 : A12, A22 types ALL□ : A11, A12, A21, A22 types	A11 type	
A2oF A21□	**A2 output allocation** Selection item: Same as those of A1 output allocation (p.90)	A21 type	
oon1 □□□0	**Output ON time when A1 output is ON** Setting range: 0 to 9999 seconds	0 seconds	
ooF1 □□□0	**Output OFF time when A1 output is ON** Setting range: 0 to 9999 seconds	0 seconds	
oon2 □□□0	**Output ON time when A2 output is ON** Setting range: 0 to 9999 seconds	0 seconds	
ooF2 □□□0	**Output OFF time when A2 output is ON** Setting range: 0 to 9999 seconds	0 seconds	
A1E□ -----	**A1 conductivity input error alarm A□□ type** Selection item: ----- : No action A11□ : A11 type A12□ : A12 type A21□ : A21 type A22□ : A22 type	No action	
A2E□ -----	**A2 conductivity input error alarm A□□ type** Selection item: ----- : No action A11□ : A11 type A12□ : A12 type A21□ : A21 type A22□ : A22 type	No action	
A1Eo 0.000	**A1 conductivity input error alarm band when A□□ output ON** Setting range: Conductivity range low limit to Conductivity range high limit	0.000 μS/cm	
A1oT □□□0	**A1 conductivity input error alarm time when A□□ output ON** Setting range: 0 to 9999 seconds or minutes (*)	0 seconds	

(*) The time unit depends on the selection in [Conductivity input error alarm time unit].

Character	Setting Item, Setting Range	Factory Default	Data
A1Ec 0.000	**A1 conductivity input error alarm band when A□□ output OFF** Setting range: Conductivity range low limit to Conductivity range high limit	0.000 μS/cm	
A1cT □□□0	**A1 conductivity input error alarm time when A□□ output OFF** Setting range: 0 to 9999 seconds or minutes (*)	0 seconds	
A2Eo 0.000	**A2 conductivity input error alarm band when A□□ output ON** Setting range: Conductivity range low limit to Conductivity range high limit	0.000 μS/cm	
A2oT □□□0	**A2 conductivity input error alarm time when A□□ output ON** Setting range: 0 to 9999 seconds or minutes (*)	0 seconds	
A2Ec 0.000	**A2 conductivity input error alarm band when A□□ output OFF** Setting range: Conductivity range low limit to Conductivity range high limit	0.000 μS/cm	
A2cT □□□0	**A2 conductivity input error alarm time when A□□ output OFF** Setting range: 0 to 9999 seconds or minutes (*)	0 seconds	
n_SU SEc□	**Conductivity input error alarm time unit** Selection item: SEc□ : Second(s) nI n□ : Minute(s)	Second(s)	

(*) The time unit depends on the selection in [Conductivity input error alarm time unit].

***** Inquiries *****

For any inquiries about this unit, please contact our agency or the vendor where you purchased the unit after checking the following.

[Example]
- Model ---------- WIL-102-ECL
- Serial number ---------- No. 195F05000

In addition to the above, please let us know the details of the malfunction, or discrepancy, and the operating conditions.

SHINKO TECHNOS CO., LTD.
OVERSEAS DIVISION

Head Office: 2-5-1, Senbahigashi, Minoo, Osaka, 562-0035, Japan
[URL] https://shinko-technos.co.jp/e/
[E-mail] overseas@shinko-technos.co.jp
Tel: +81-72-727-6100
Fax: +81-72-727-7006

No. WIL12CECE9 2025.04